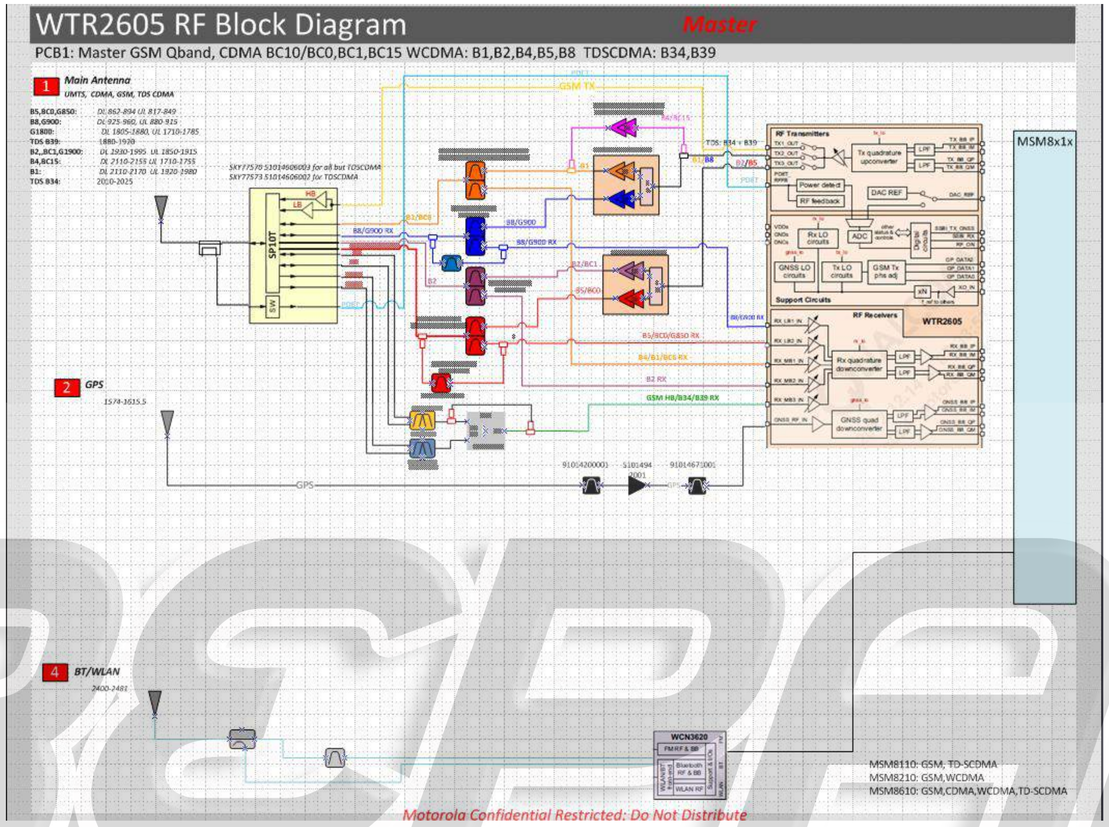

VARIANT	BOM #	MSM	WTR	TDSCDMA BANDS	UMTS BANDS	CDMA BANDS	GSM BANDS	# OF SIM'S
UMTS_GLOBAL1	1	8210	2605	--	B1(2100) B2(1900) B5(850) B8(900)	--	QUAD BAND	1
UMTS_GLOBAL2	2	8210	2605	--	B1(2100) B2(1900) B5(850) B8(900)	--	QUAD BAND	2
UMTS_AMERICA	3	8210	2605	--	B2(1900) B5(850)	--	QUAD BAND	1
UMTS_AWS	4	8210	2605	--	B2(1900) B4(1700) B5(850)	--	QUAD BAND	1
UMTS_BRAZIL1	5	8210	2605	--	B1(2100) B5(850)	--	QUAD BAND	1
UMTS_BRAZIL2	6	8210	2605	--	B1(2100) B5(850)	--	QUAD BAND	2
UMTS_EURO	7	8210	2605	--	B1(2100) B8(900)	--	QUAD BAND	1
CDMA_BC0BC1BC10	8	8610	2605	--	--	BC0(850) BC1(1900) BC10(850)	--	0
CDMA	9	8610	2605	--	--	BC0(850) BC1(1900) BC10(850) BC15(1700)	--	0
CDMA_GSM	10	8610	2605	--	--	BC0(850) BC1(1900)	QUAD BAND	2
TDSCDMA	11	8610	2605	B34(2100) B39(1900)	B1(2100)	--	QUAD BAND	1

MOTOROLA CONFIDENTIAL RESTRICTED

CONDOR_P1

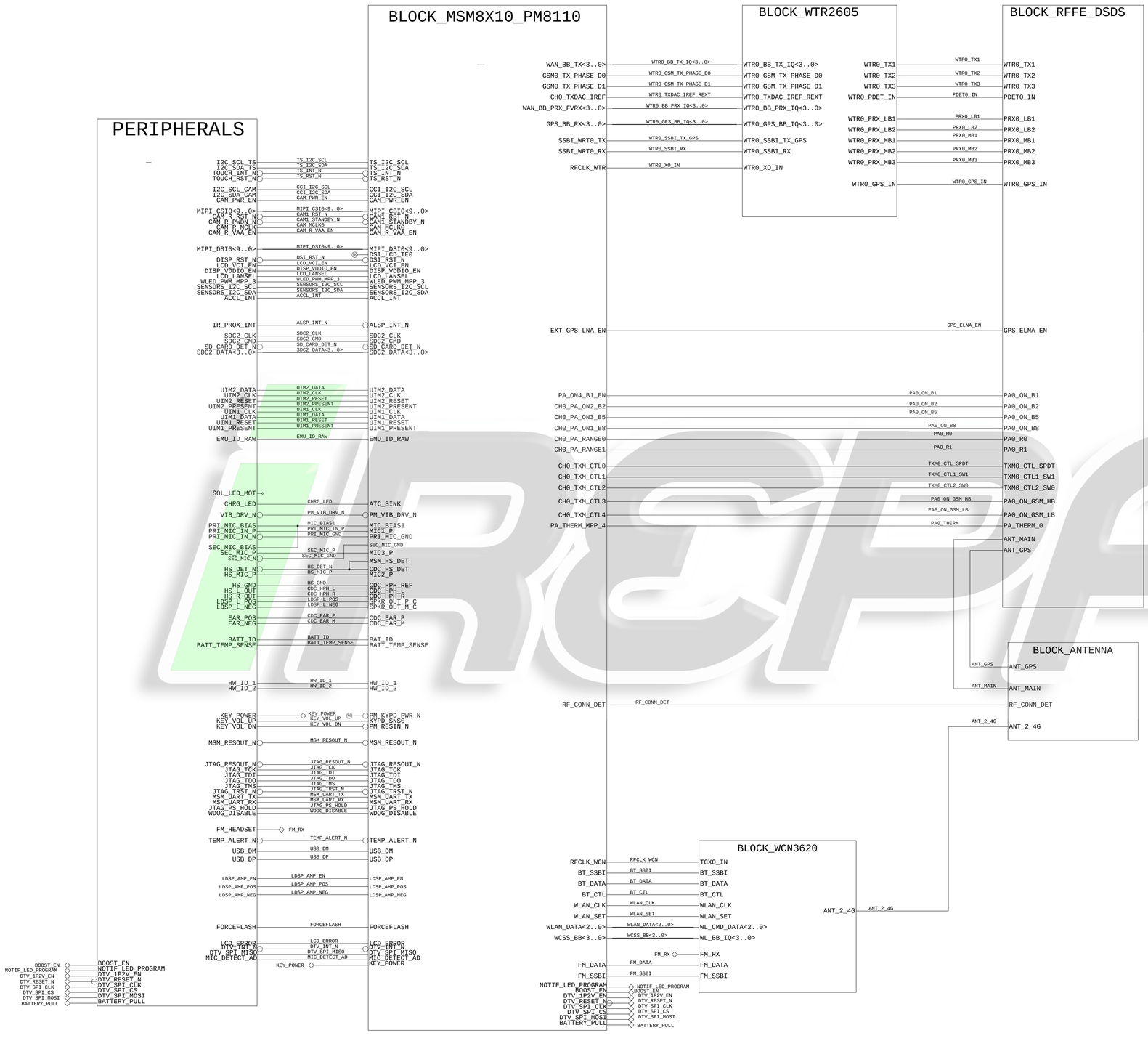

MOTOROLA CONFIDENTIAL RESTRICTED

LAST MODIFIED: Fri Dec 13 16:41:09 2013			
ENGINEER:	DRAWING NUMBER: 84		REV 05
SCHEMATIC NAME: 84016295		SIZE: D	PAGE 2 OF 38

REVISIONS				
REV	ECN	DESCRIPTION	MADE BY	APPROVED

MECHANICAL SHIELDS

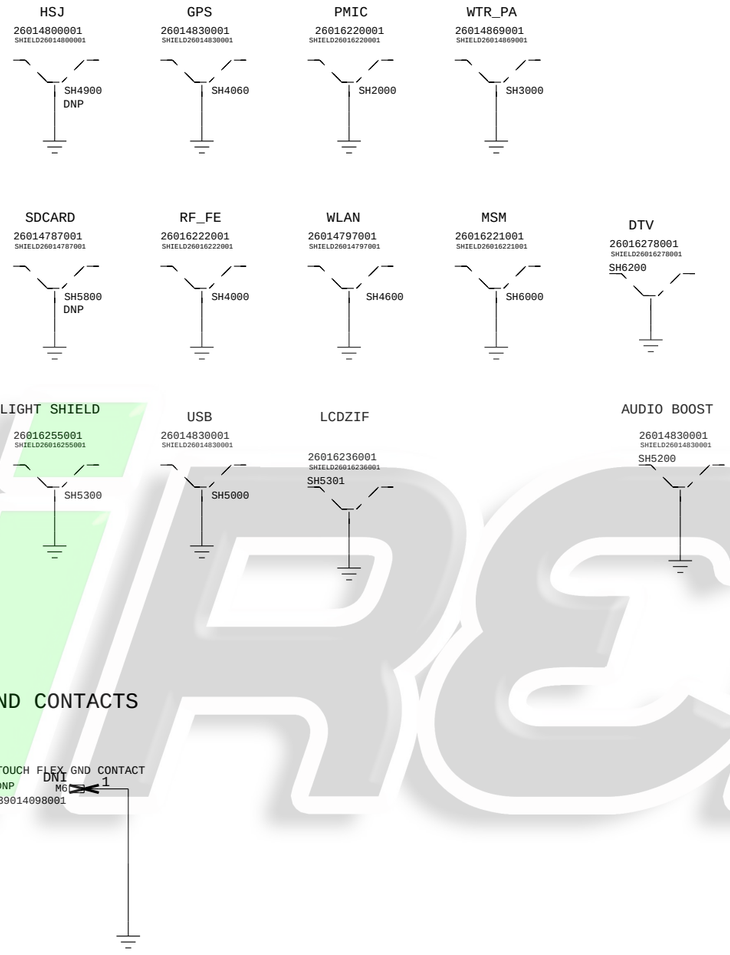

UNIVERSAL GROUND CONTACTS

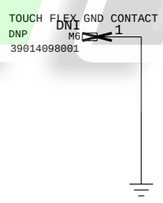

REPAIR

LAST MODIFIED: Wed Mar 05 11:23:40 2014

DRAWING NUMBER: 84	MOTOROLA		
DRAWN BY: DATE:	TITLE:		REV 05
LEAD ENGINEER: DATE:			SIZE B
ASSY NUMBER:	PCB FILE NAME:	PAGE 3 OF 38	

MOTOROLA CONFIDENTIAL RESTRICTED

WCN3620 RF/CTRL

REF 4600-4699

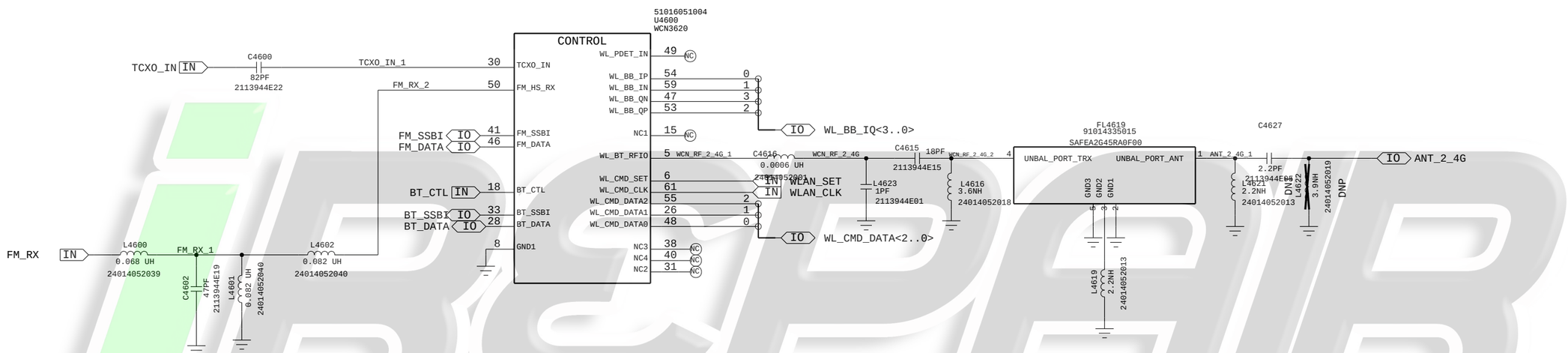

BASED ON 80-WL006-44 REV C

APPROVALS	MOTOROLA MOBILE DEVICES
ENGINEER:	BLOCK TITLE: block_wcn3620
LAST MODIFIED BY: FROEHLING Wed Mar 05 11:23:59 2014	
MOTOROLA CONFIDENTIAL RESTRICTED	B — PROJECT NAME: 84016295.cpm — REV: 05
THE DRAWING ON THIS PRINT AND INFORMATION THEREWITH ARE PROPRIETARY TO MOTOROLA AND SHALL NOT BE USED OR DISCUSSED IN WHOLE OR IN PART WITHOUT MOTOROLA'S CONSENT. © COPYRIGHT, MOTOROLA. THIS DOES NOT IMPLY PUBLICATION	CAD FILE NAME: — PAGE 4 OF 38

iREPAIR

WCN3620 POWER

REF 4700-4799

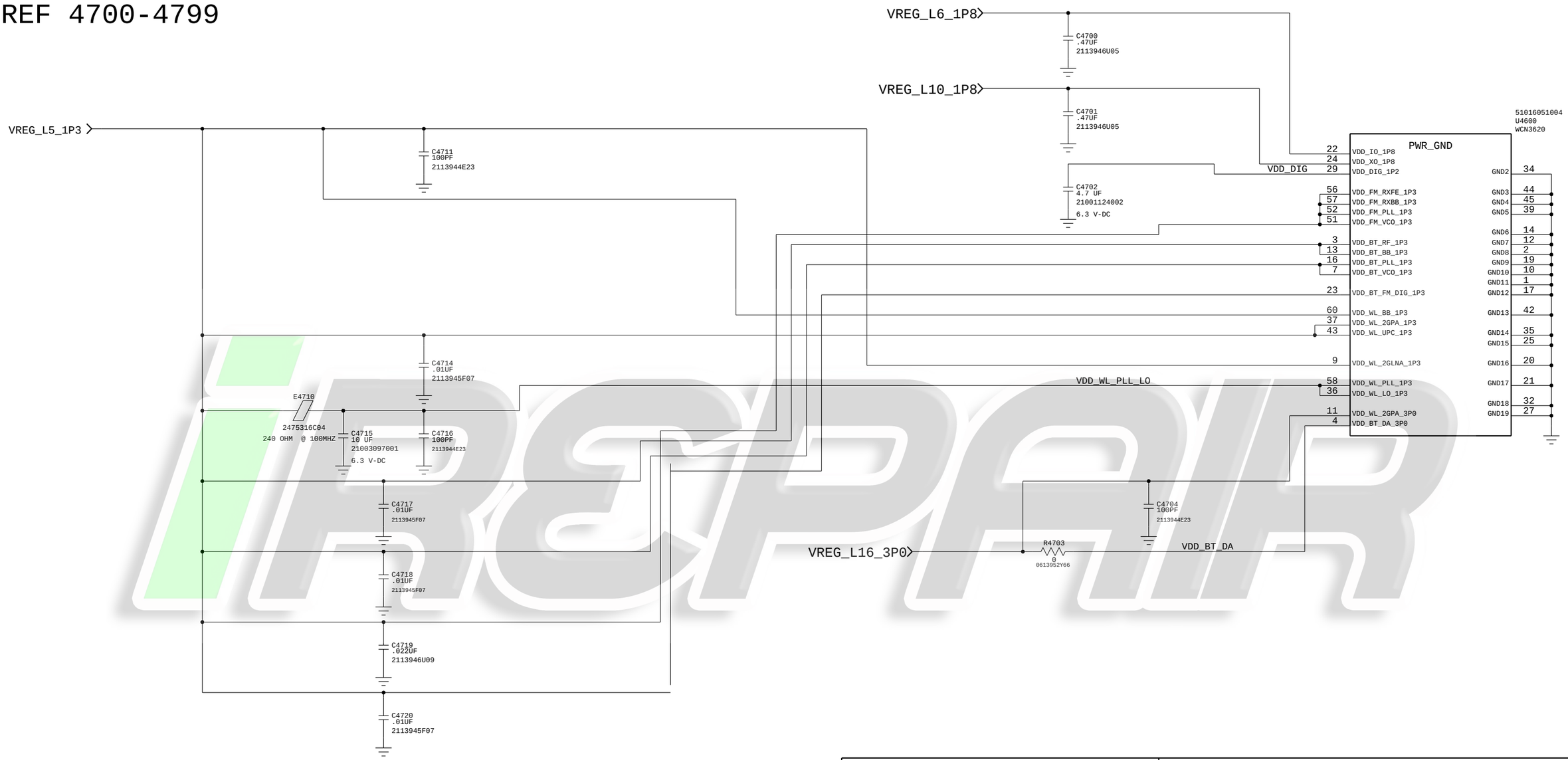

BASED ON 80-WL006-44 REV C

APPROVALS	MOTOROLA MOBILE DEVICES
ENGINEER:	BLOCK TITLE: block_wcn3620
LAST MODIFIED BY: FROEHLING Wed Mar 05 11:24:00 2014	
MOTOROLA CONFIDENTIAL RESTRICTED	B — PROJECT NAME: 84016295.cpm — REV: 05
THE DRAWING ON THIS PRINT AND INFORMATION THEREWITH ARE PROPRIETARY TO MOTOROLA AND SHALL NOT BE USED OR DISCUSSED IN WHOLE OR IN PART WITHOUT MOTOROLA'S CONSENT. © COPYRIGHT, MOTOROLA. THIS DOES NOT IMPLY PUBLICATION	CAD FILE NAME: — PAGE 5 OF 38

iRepair

MSM8X10 CTRL
REF 1000-1099

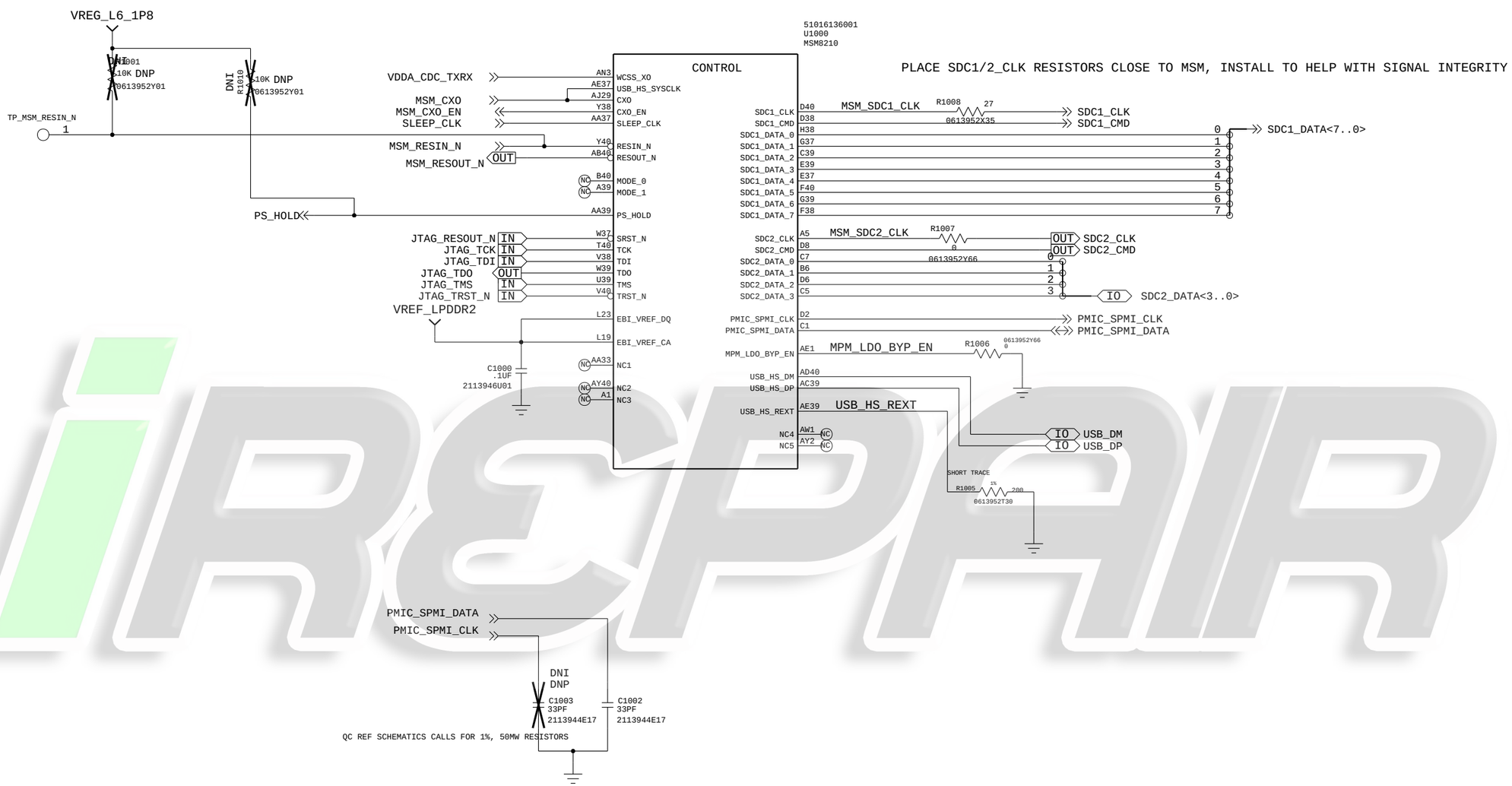

APPROVALS	MOTOROLA MOBILE DEVICES
ENGINEER:	BLOCK TITLE: block_msm8x10_pm8110
LAST MODIFIED BY: FAN021 Wed Mar 05 11:24:11 2014	
MOTOROLA CONFIDENTIAL RESTRICTED	B — PROJECT NAME: 84016295.cpm — REV: 05
	CAD FILE NAME: — PAGE 6 OF 38

THE DRAWING ON THIS PRINT AND INFORMATION THEREWITH ARE PROPRIETARY TO MOTOROLA AND SHALL NOT BE USED OR DISCUSSED IN WHOLE OR IN PART WITHOUT MOTOROLA'S CONSENT.
© COPYRIGHT, MOTOROLA. THIS DOES NOT IMPLY PUBLICATION

MSM8X10 MIPI/DSI/CSI/EBIO

REF 1200-1299

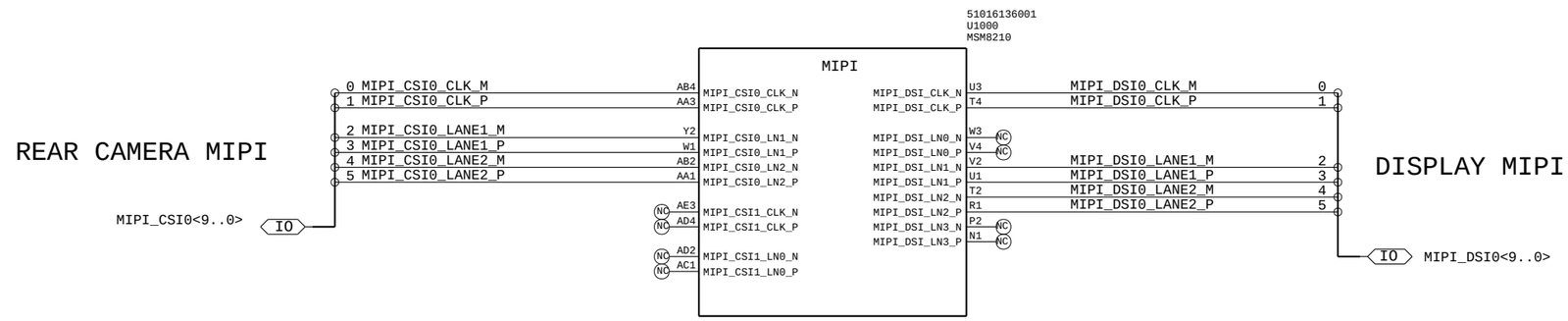

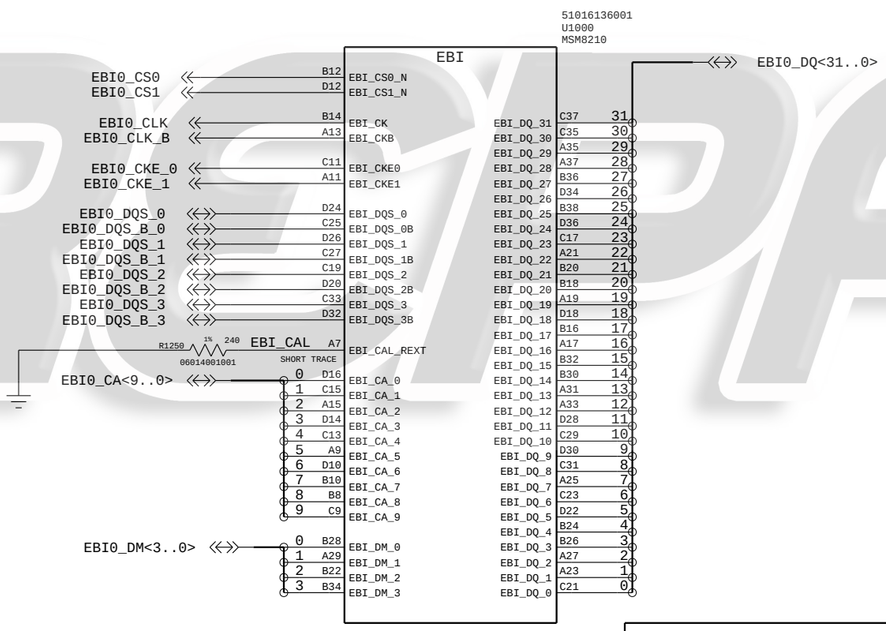

APPROVALS	MOTOROLA MOBILE DEVICES
ENGINEER:	BLOCK TITLE: block_msm8x10_pm8110
LAST MODIFIED BY: Wed Mar 05 11:24:10 2014	
MOTOROLA CONFIDENTIAL RESTRICTED	B — PROJECT NAME: 84016295.cpm — REV: 05
THE DRAWING ON THIS PRINT AND INFORMATION THEREWITH ARE PROPRIETARY TO MOTOROLA AND SHALL NOT BE USED OR DISCUSSED IN WHOLE OR IN PART WITHOUT MOTOROLA'S CONSENT. © COPYRIGHT, MOTOROLA. THIS DOES NOT IMPLY PUBLICATION	CAD FILE NAME:
	PAGE 7 OF 38

iRGPAR

MSM8X10 RF INTERFACE

REF 1200-1299

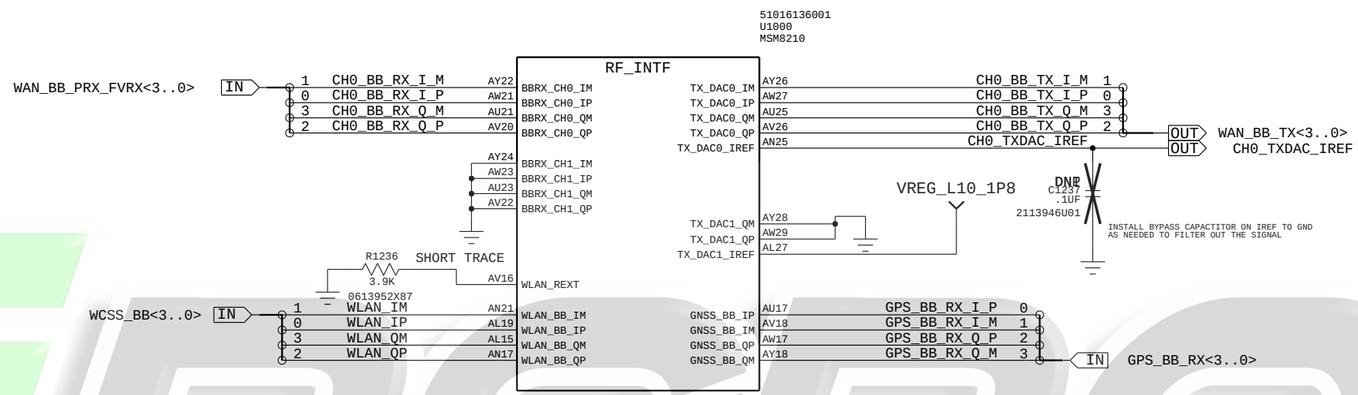

INFO: QC DOES NOT HAVE SOME BUSES SO SOME OF THE NAMES ARE COPIED FROM DVX

iREPAIR

APPROVALS	MOTOROLA MOBILE DEVICES
ENGINEER:	BLOCK TITLE: block_msm8x10_pm8110
LAST MODIFIED BY: FAN021 Wed Mar 05 11:24:06 2014	
MOTOROLA CONFIDENTIAL RESTRICTED	B — PROJECT NAME: 84016295.cpm — REV: 05
THE DRAWING ON THIS PRINT AND INFORMATION THEREWITH ARE PROPRIETARY TO MOTOROLA AND SHALL NOT BE USED OR DISCUSSED IN WHOLE OR IN PART WITHOUT MOTOROLA'S CONSENT.	CAD FILE NAME:
© COPYRIGHT, MOTOROLA. THIS DOES NOT IMPLY PUBLICATION	PAGE 8 OF 38

MSM8X10-GPIO (0-101)

REF 1200-1299

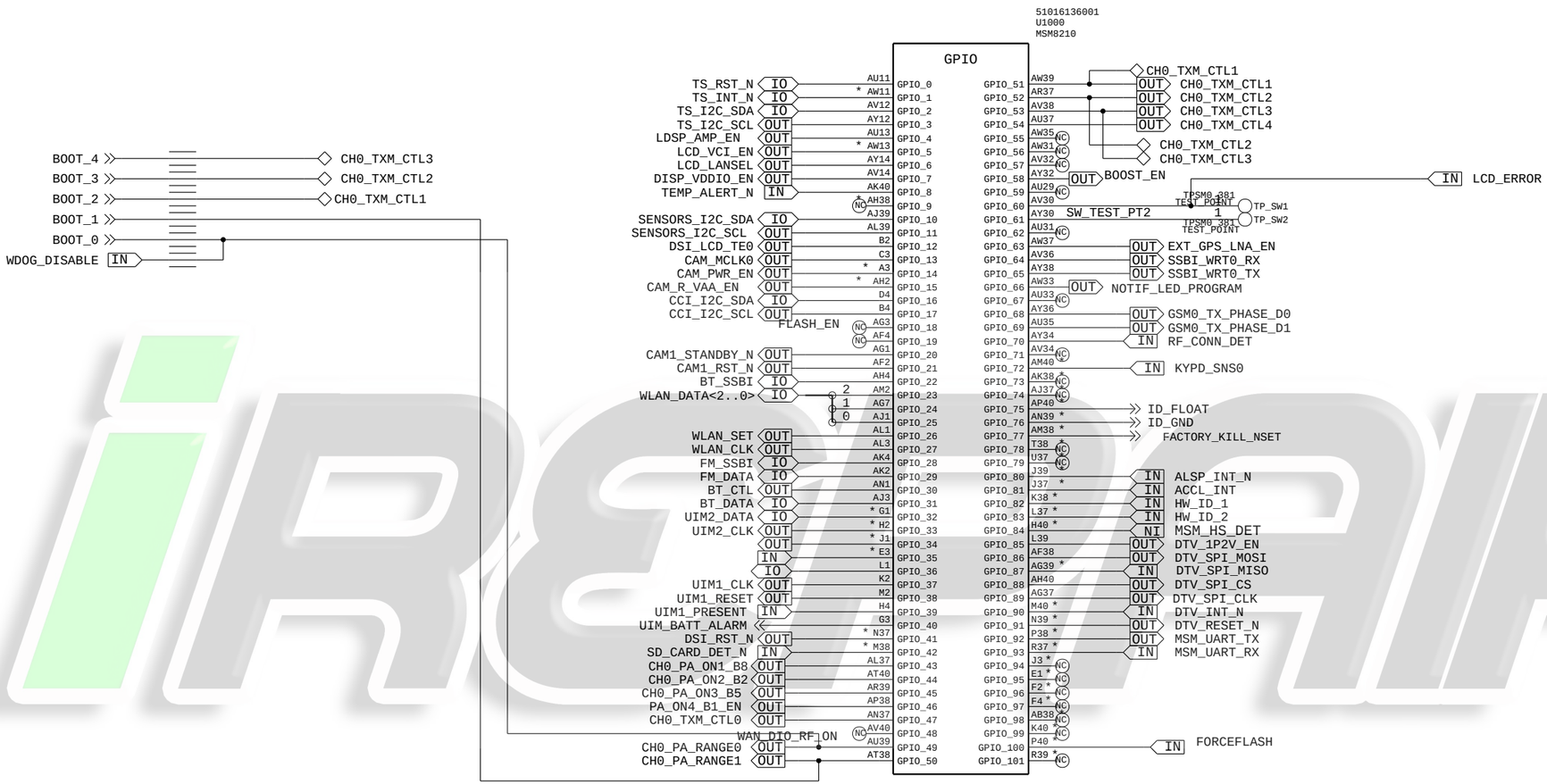

NOTE: ASTERISK (*) INDICATES MPM WAKE-ABLE GPIOS

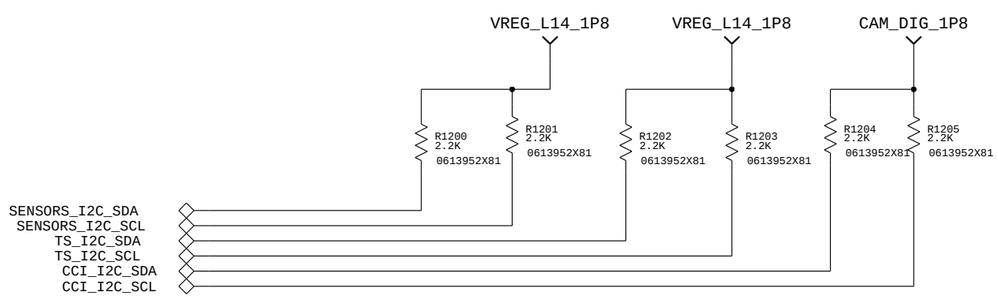

APPROVALS	MOTOROLA MOBILE DEVICES
ENGINEER:	BLOCK TITLE: block_msm8x10_pm8110
LAST MODIFIED BY: FAN021 Wed Mar 05 11:24:04 2014	
MOTOROLA CONFIDENTIAL RESTRICTED	B — PROJECT NAME: 84016295.cpm — REV: 05
	CAD FILE NAME: — PAGE 9 OF 38

THE DRAWING ON THIS PRINT AND INFORMATION THEREWITH ARE PROPRIETARY TO MOTOROLA AND SHALL NOT BE USED OR DISCUSSED IN WHOLE OR IN PART WITHOUT MOTOROLA'S CONSENT.
© COPYRIGHT, MOTOROLA. THIS DOES NOT IMPLY PUBLICATION

MSM8X10-CODEC

REF 1500-1579

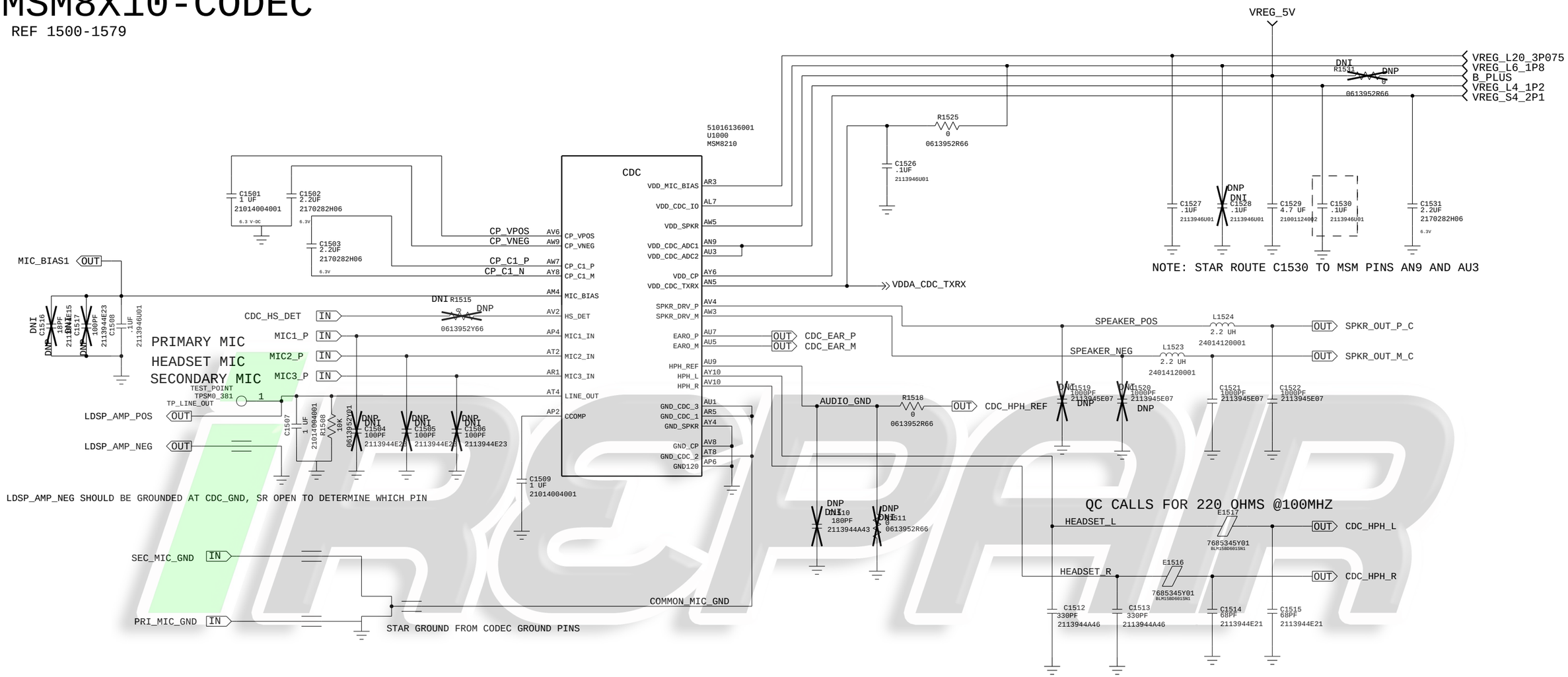

APPROVALS	MOTOROLA MOBILE DEVICES
ENGINEER:	BLOCK TITLE: block_msm8x10_pm8110
LAST MODIFIED BY FAN021 Wed Mar 05 11:24:02 2014	
MOTOROLA CONFIDENTIAL RESTRICTED	B — PROJECT NAME 84016295.cpm — REV 05
THE DRAWING ON THIS PRINT AND INFORMATION THEREWITH ARE PROPRIETARY TO MOTOROLA AND SHALL NOT BE USED OR DISCUSSED IN WHOLE OR IN PART WITHOUT MOTOROLA'S CONSENT.	CAD FILE NAME:
© COPYRIGHT, MOTOROLA. THIS DOES NOT IMPLY PUBLICATION	PAGE 10 OF 38

MSM8X10-PWR1

REF 1300-1399

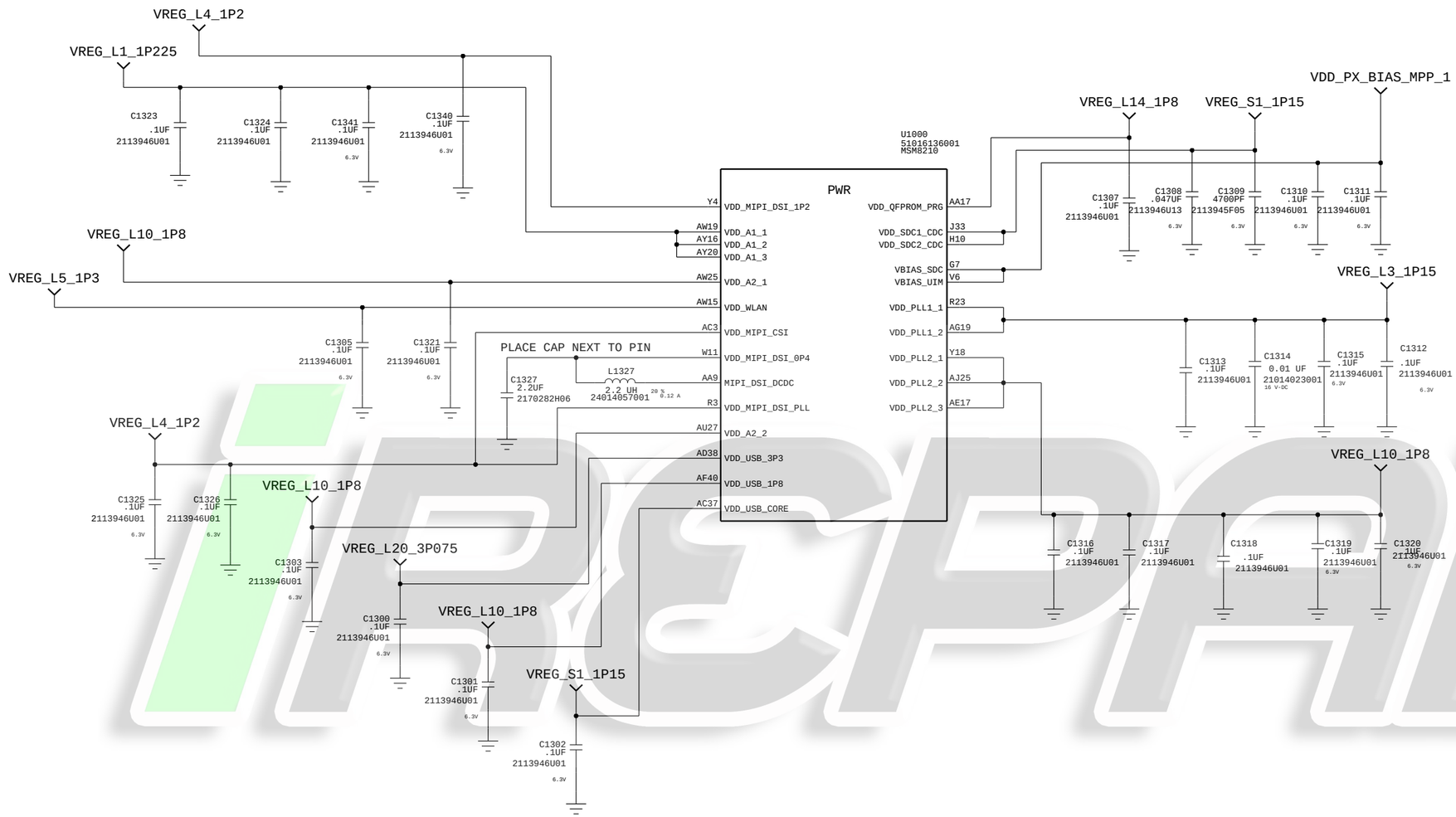

APPROVALS	MOTOROLA MOBILE DEVICES
ENGINEER:	BLOCK TITLE: block_msm8x10_pm8110
LAST MODIFIED BY: FAN021 Wed Mar 05 11:24:07 2014	
MOTOROLA CONFIDENTIAL RESTRICTED	B — PROJECT NAME: 84016295.cpm — REV: 05
THE DRAWING ON THIS PRINT AND INFORMATION THEREWITH ARE PROPRIETARY TO MOTOROLA AND SHALL NOT BE USED OR DISCUSSED IN WHOLE OR IN PART WITHOUT MOTOROLA'S CONSENT. © COPYRIGHT, MOTOROLA. THIS DOES NOT IMPLY PUBLICATION	CAD FILE NAME: — PAGE 11 OF 38

iRepair

MSM8X10-PWR2

REF 1300-1399

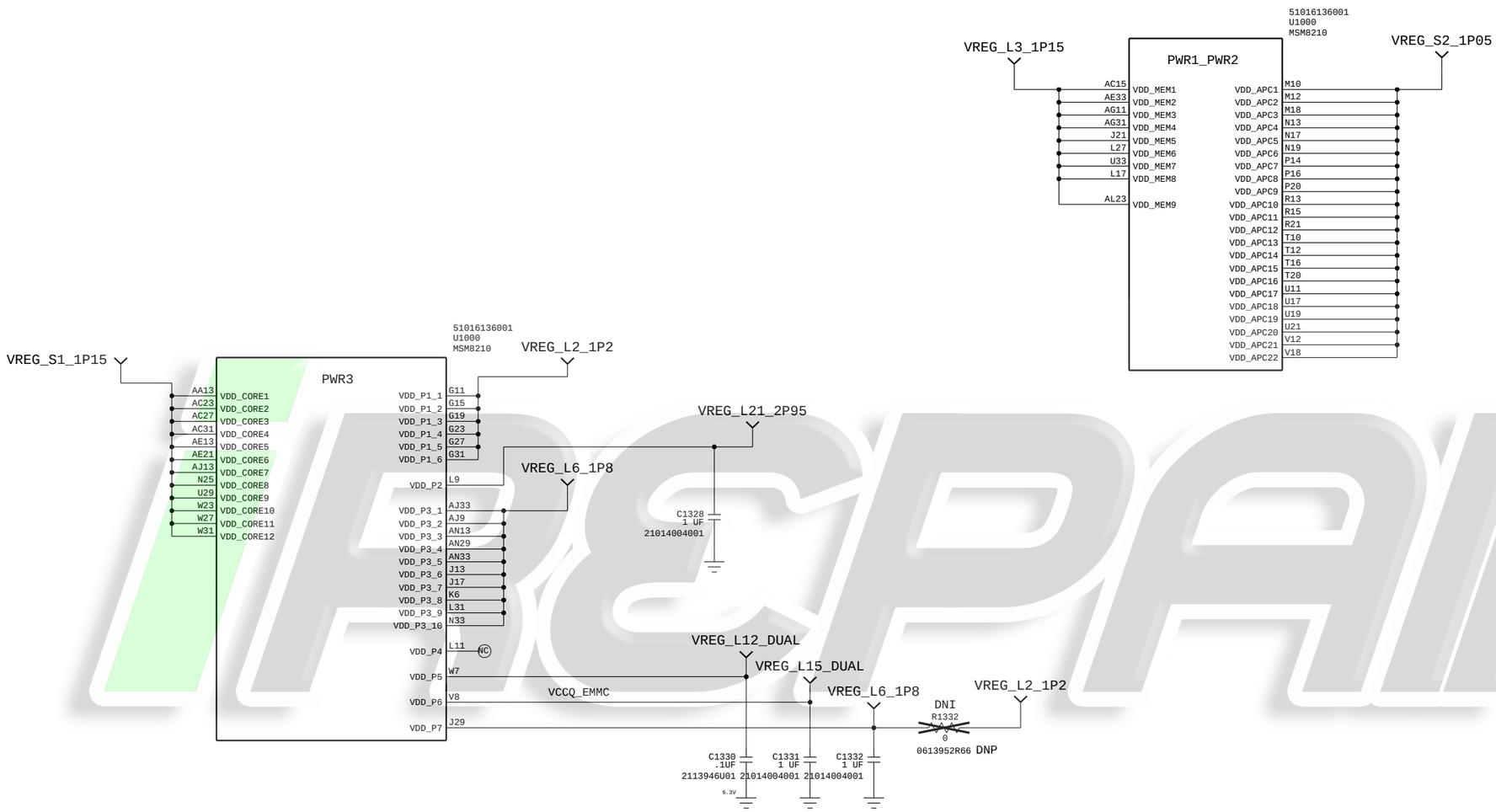

APPROVALS	MOTOROLA MOBILE DEVICES
ENGINEER:	BLOCK TITLE: block_msm8x10_pm8110
LAST MODIFIED BY: FAN021 Wed Mar 05 11:24:08 2014	
MOTOROLA CONFIDENTIAL RESTRICTED	B — PROJECT NAME: 84016295.cpm — REV: 05
THE DRAWING ON THIS PRINT AND INFORMATION THEREWITH ARE PROPRIETARY TO MOTOROLA AND SHALL NOT BE USED OR DISCUSSED IN WHOLE OR IN PART WITHOUT MOTOROLA'S CONSENT. © COPYRIGHT, MOTOROLA. THIS DOES NOT IMPLY PUBLICATION	CAD FILE NAME: — PAGE 12 OF 38

IRREPAIR

MSM8X10 BYPASS CAPS

REF 1400-1499

NOTE: CAP VALUES AND QUANTITIES ARE HEAVILY DEPENDENT ON LAYOUT.
OPTIMIZE PER POWER RAIL USING PDN SPECS DEFINED IN 80-ND717-1

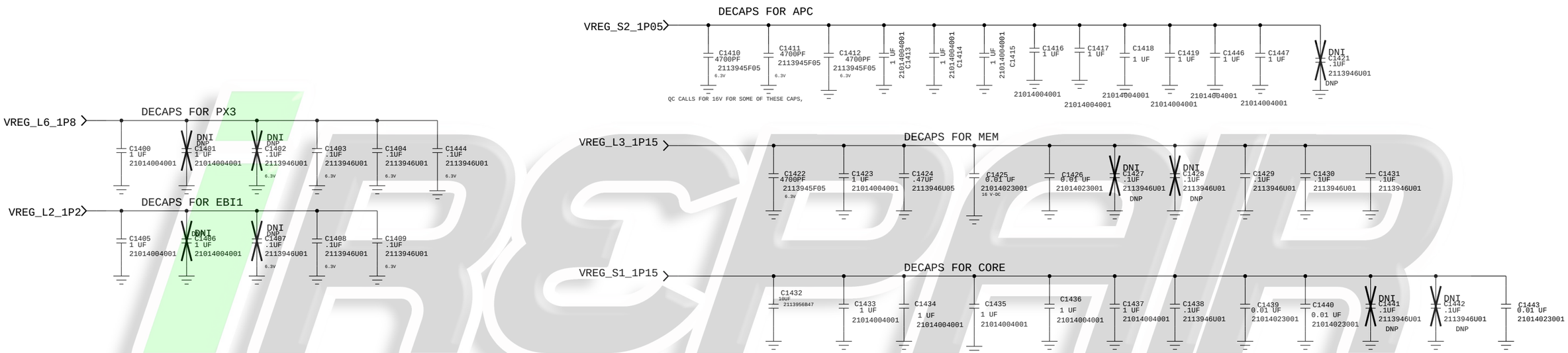

APPROVALS	MOTOROLA MOBILE DEVICES
ENGINEER:	BLOCK TITLE: block_msm8x10_pm8110
LAST MODIFIED BY: FAN021 Wed Mar 05 11:24:08 2014	
MOTOROLA CONFIDENTIAL RESTRICTED	B — PROJECT NAME: 84016295.cpm — REV: 05
THE DRAWING ON THIS PRINT AND INFORMATION THEREWITH ARE PROPRIETARY TO MOTOROLA AND SHALL NOT BE USED OR DISCUSSED IN WHOLE OR IN PART WITHOUT MOTOROLA'S CONSENT. © COPYRIGHT, MOTOROLA. THIS DOES NOT IMPLY PUBLICATION	CAD FILE NAME:
	PAGE 13 OF 38

MSM8X10-GROUND

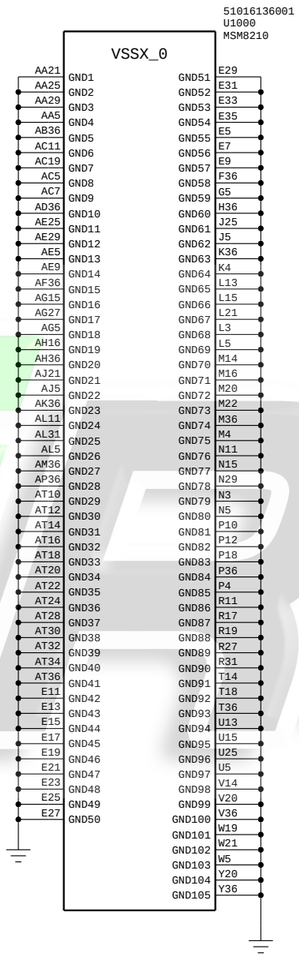

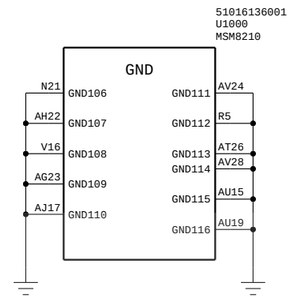

iRepair

APPROVALS	MOTOROLA MOBILE DEVICES
ENGINEER:	BLOCK TITLE: block_msm8x10_pm8110
LAST MODIFIED BY: FAN021 Wed Mar 05 11:24:05 2014	
MOTOROLA CONFIDENTIAL RESTRICTED	B — PROJECT NAME: 84016295.cpm — REV: 05
THE DRAWING ON THIS PRINT AND INFORMATION THEREWITH ARE PROPRIETARY TO MOTOROLA AND SHALL NOT BE USED OR DISCUSSED IN WHOLE OR IN PART WITHOUT MOTOROLA'S CONSENT.	CAD FILE NAME:
© COPYRIGHT, MOTOROLA. THIS DOES NOT IMPLY PUBLICATION	PAGE 14 OF 38

BOOT OPTIONS

BOOT_CONFIG[4..0], INTERNAL PD

0000X = EMMC -> SDC2 -> USB
0001X = SDC2 -> SDC1
0010X = EMMC
0011X = USB-HS

BOOT_CONFIG[0]

0 = NORMAL
1 = WDOG DISABLE

MOT BOARD ID

FOR RUNTIME REVISION INFORMATION, REFER TO:
https://sites.google.com/a/motorola.com/runtime-product-ids

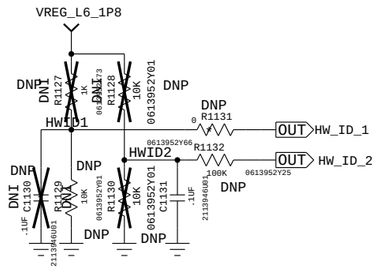

APPROVALS	MOTOROLA MOBILE DEVICES
ENGINEER:	BLOCK TITLE: block_msm8x10_pm8110
LAST MODIFIED BY: FAN021 Wed Mar 05 11:24:04 2014	
MOTOROLA CONFIDENTIAL RESTRICTED	B — PROJECT NAME: 84016295.cpm — REV: 05
THE DRAWING ON THIS PRINT AND INFORMATION THEREWITH ARE PROPRIETARY TO MOTOROLA AND SHALL NOT BE USED OR DISCUSSED IN WHOLE OR IN PART WITHOUT MOTOROLA'S CONSENT. © COPYRIGHT, MOTOROLA. THIS DOES NOT IMPLY PUBLICATION	CAD FILE NAME: — PAGE 15 OF 38

iREPAIR

MEMORY

REVISIONS				
REV	ECN	DESCRIPTION	MADE BY	APPROVED

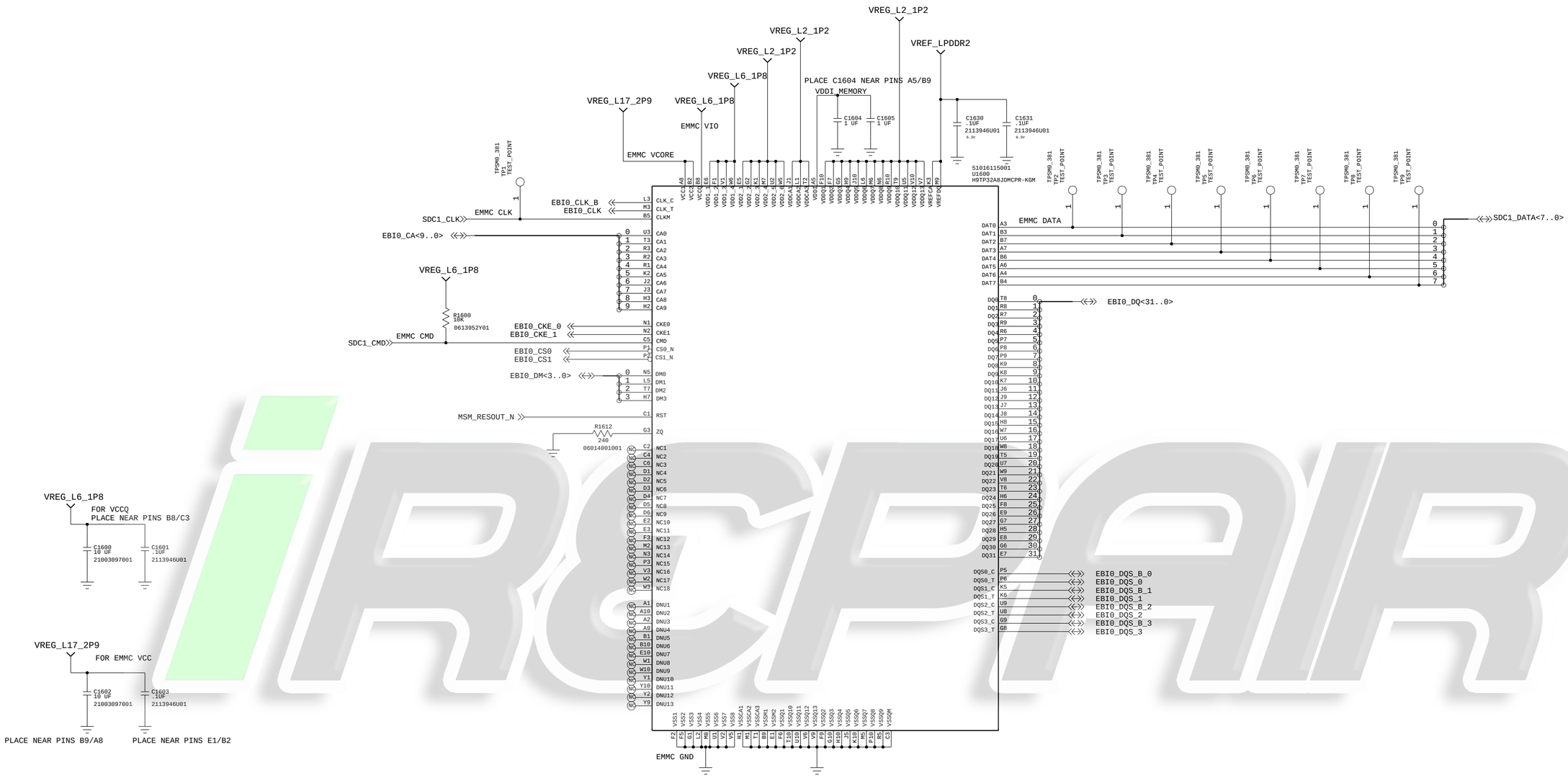

MCP: 4GB NAND, 8GBIT LPDDR2

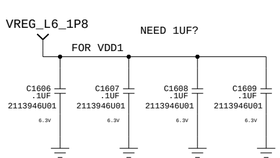

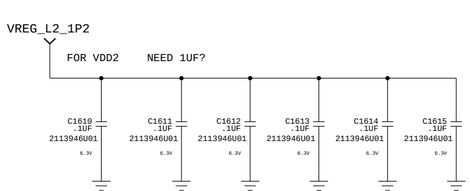

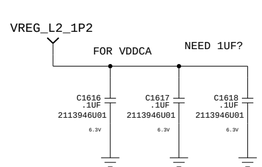

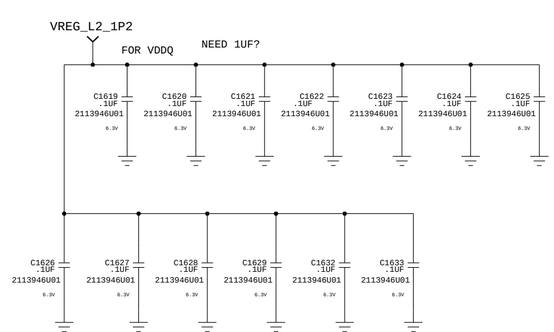

iRepair

LAST MODIFIED: Wed Mar 05 11:24:09 2014

DRAWING NUMBER: 84		MOTOROLA	
DRAWN BY:	DATE:	TITLE:	REV 05
LEAD ENGINEER:	DATE:		SIZE C
ASSY NUMBER:		PCB FILE NAME:	PAGE 16 OF 38

MOTOROLA CONFIDENTIAL RESTRICTED

PM8110 CLK/CTRL

REF 2000-2099

REVISIONS				
REV	ECN	DESCRIPTION	MADE BY	APPROVED

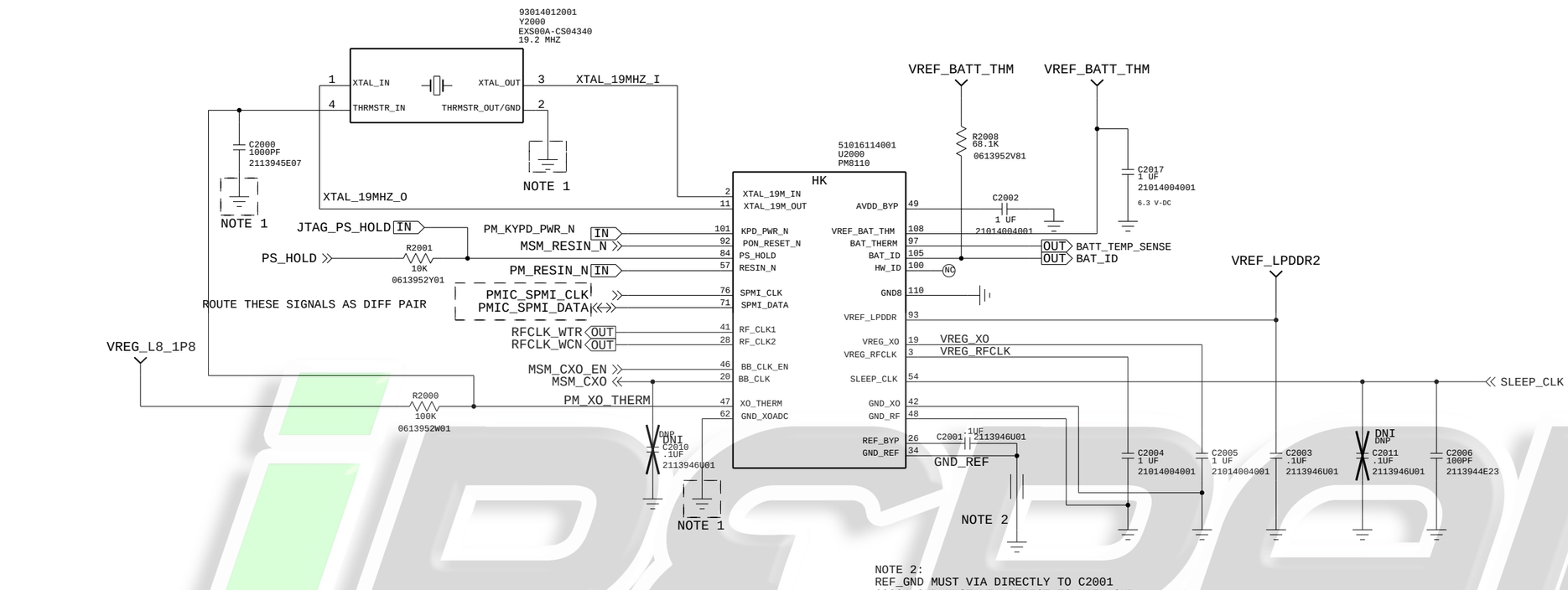

NOTE 2:
REF_GND MUST VIA DIRECTLY TO C2001
C2001 GND MUST VIA DIRECT TO MAIN GND

NOTE 1: MAKE A GND ISLAND FOR U2000 GND_XOADC,
C2000, C2020, C2021, AND Y2000 THRM_GND THAT CONNECTS TO THE GND PLANE
OF THE NEG SIDE OF C2000

FACTORY KILL - CABLE DETECT - WALL WART

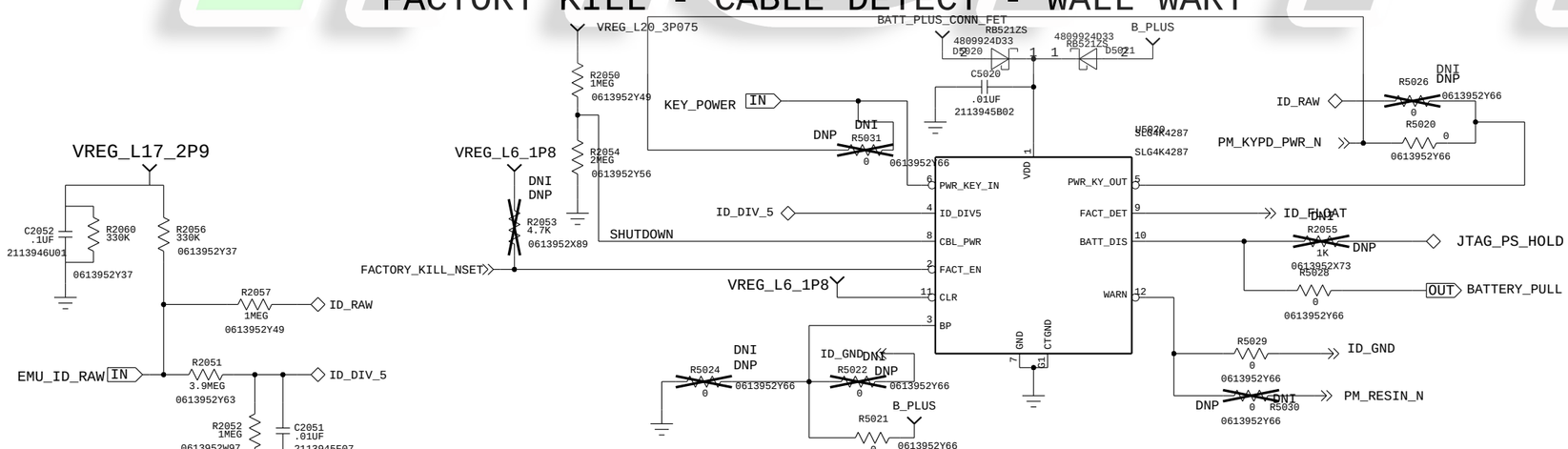

REF 5020-5039

(ALSO COMBINED WITH PAGE'S REFS 2000-2099)

MOTOROLA CONFIDENTIAL RESTRICTED

LAST MODIFIED: Wed Mar 05 11:24:01 2014

DRAWING NUMBER: 84	MOTOROLA		
DRAWN BY: FMD026	DATE: 06AUG2013	TITLE:	REV 05
LEAD ENGINEER:	DATE:		SIZE B
ASSY NUMBER:	PCB FILE NAME:		PAGE 17 OF 38

PM8110 CHRG/LED/GPIO
REF 2100-2199

REVISIONS				
REV	ECN	DESCRIPTION	MADE BY	APPROVED

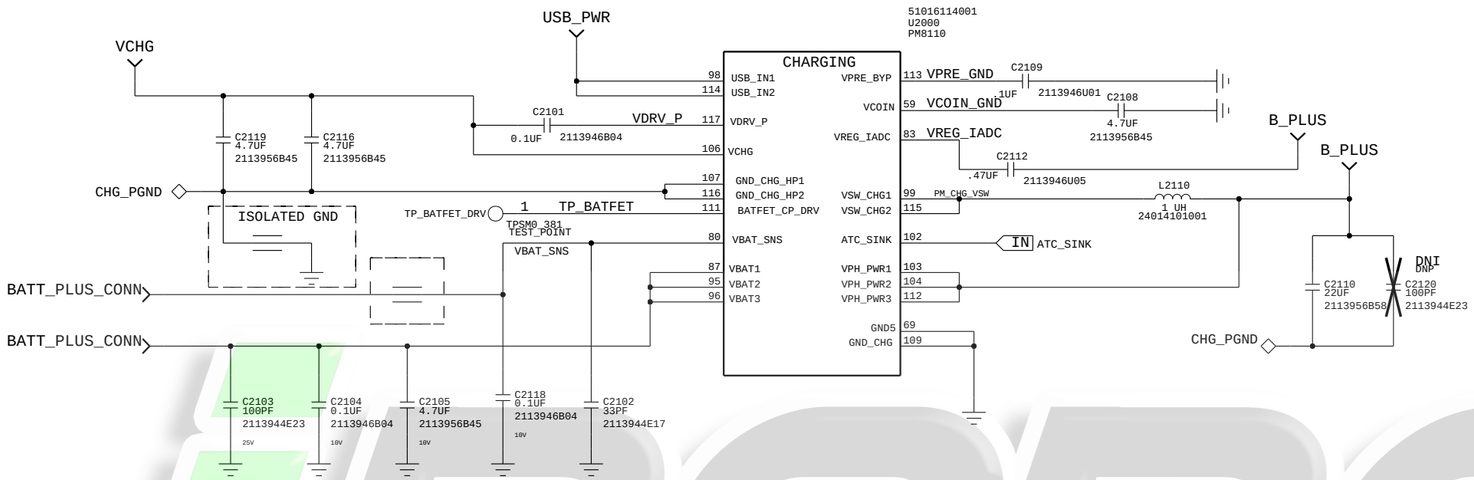

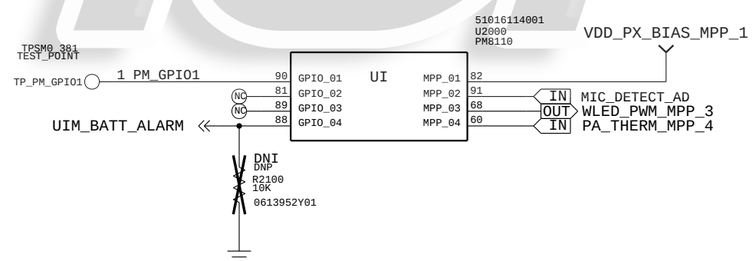

iREPAIR

LAST MODIFIED: Wed Mar 05 11:24:03 2014

DRAWING NUMBER: 84	MOTOROLA		
DRAWN BY: DATE:	TITLE:		REV 05
LEAD ENGINEER: DATE:			SIZE B
ASSY NUMBER:	PCB FILE NAME:	PAGE 18 OF 38	

MOTOROLA CONFIDENTIAL RESTRICTED

PM8110 SMPS

REF 2200-2299

REVISIONS				
REV	ECN	DESCRIPTION	MADE BY	APPROVED

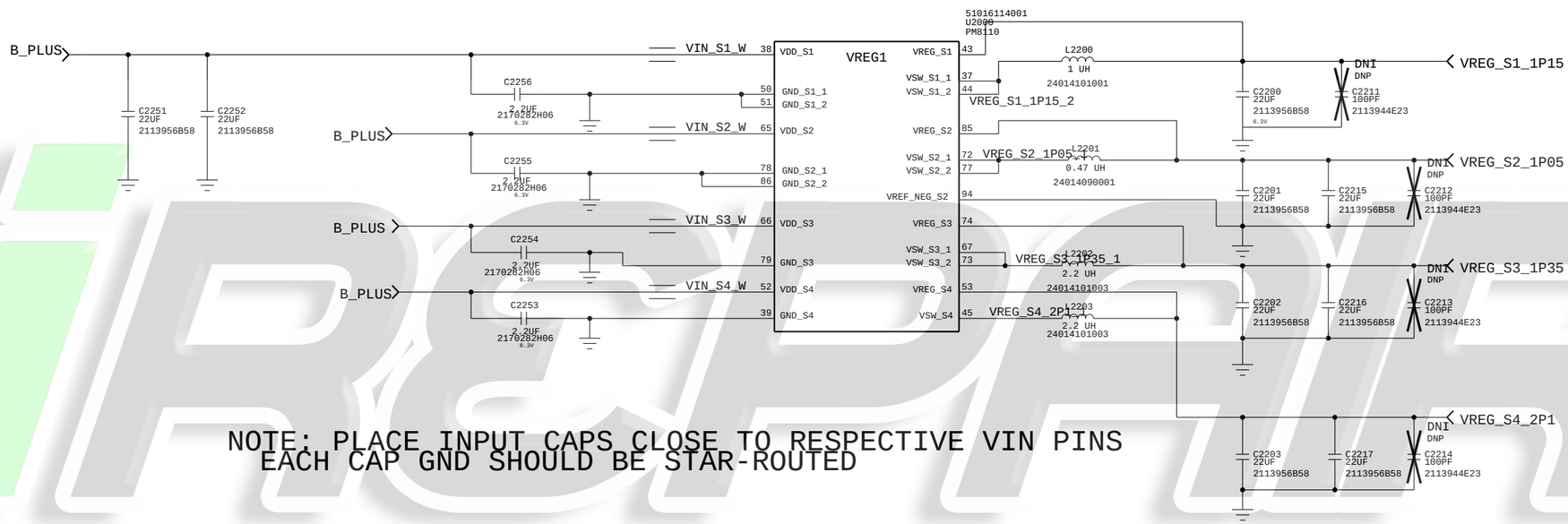

NOTE: PLACE INPUT CAPS CLOSE TO RESPECTIVE VIN PINS
EACH CAP GND SHOULD BE STAR-ROUTED

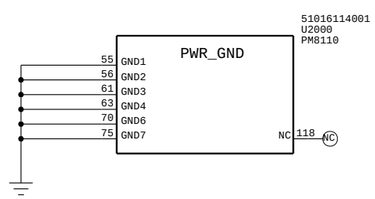

iREPAIR

LAST MODIFIED: Wed Mar 05 11:24:06 2014

DRAWING NUMBER: 84	MOTOROLA	
DRAWN BY: DATE:	TITLE:	REV 05
LEAD ENGINEER: DATE:		SIZE B
ASSY NUMBER:	PCB FILE NAME:	PAGE 19 OF 38

MOTOROLA CONFIDENTIAL RESTRICTED

PM8110 VREGS

REF 2300-2399

REVISIONS				
REV	ECN	DESCRIPTION	MADE BY	APPROVED

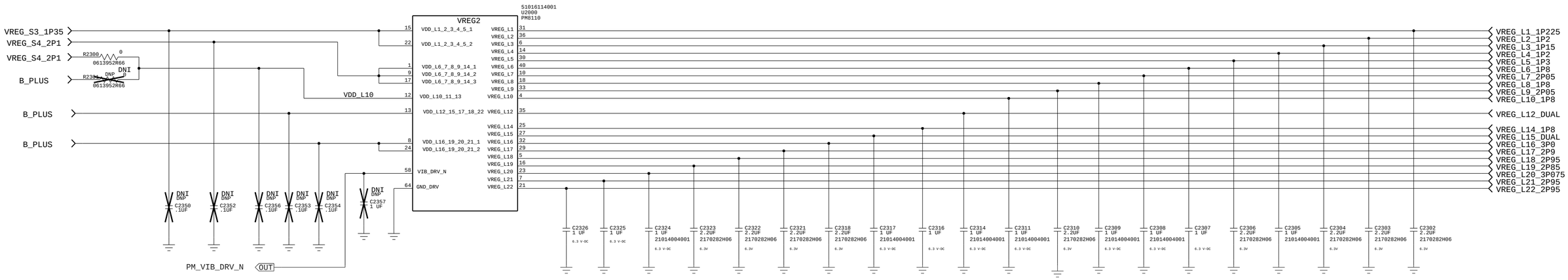

PSEUDO CAPLESS LDOS
L4,L6,L7,L10,L12,L14,L15,L20,L21 AND L22

NOTE: IF A DECOUPLING CAP OF A PSEUDO CAPLES LDO
DOES NOT ADD TO 1UF ON THE LOAD SIDE, INSTALL THE CAP
CLOSE TO THE PMIC

iREPAIR

MOTOROLA CONFIDENTIAL RESTRICTED

LAST MODIFIED: Wed Mar 05 11:24:03 2014

DRAWING NUMBER: 84	MOTOROLA	
DRAWN BY: DATE:	TITLE:	REV 05
LEAD ENGINEER: DATE:		SIZE C
ASSY NUMBER:	PCB FILE NAME:	PAGE 20 OF 38

POWER

REF:5000 - 5299

MICRO USB

REF:5000 - 5019

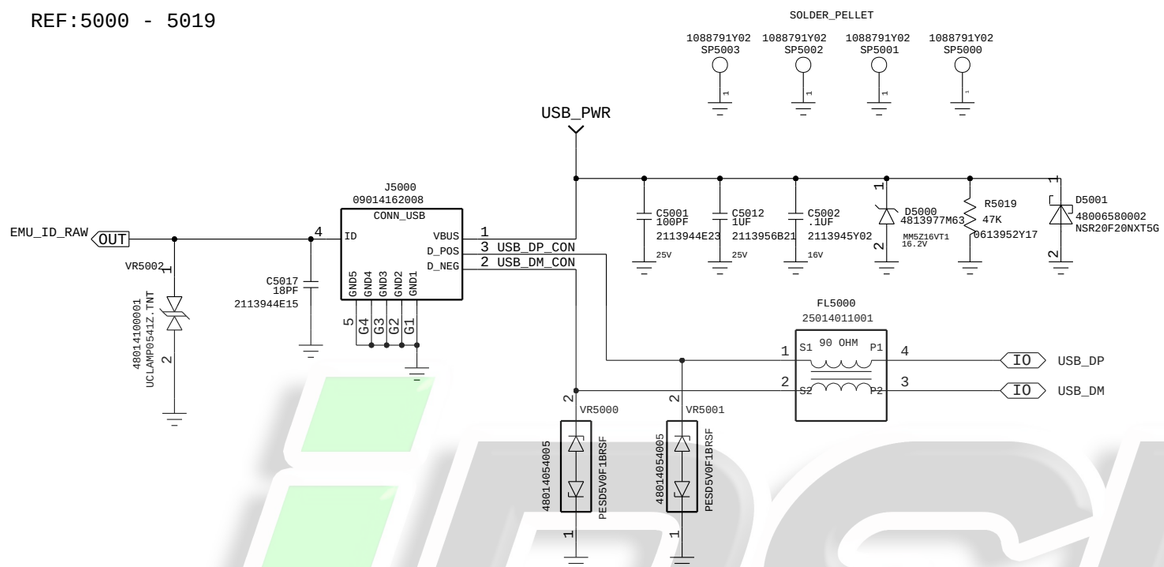

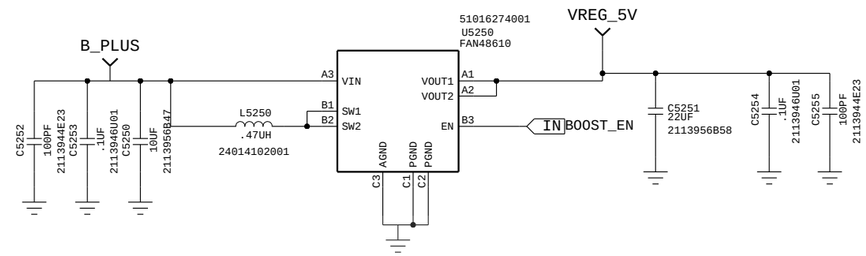

BATTERY BLOCK

REF:5200 - 5249

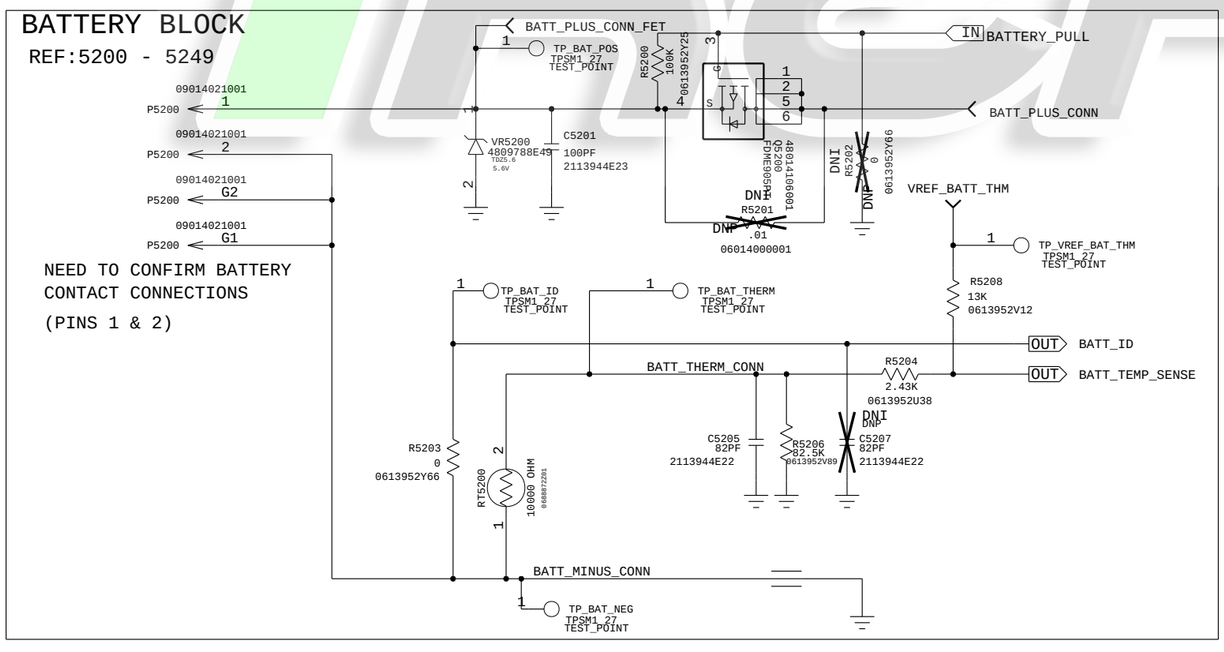

NEED TO CONFIRM BATTERY CONTACT CONNECTIONS

(PINS 1 & 2)

APPROVALS	MOTOROLA MOBILE DEVICES	
ENGINEER: RICH NG	BLOCK TITLE: peripherals	
LAST MODIFIED BY: NATE CONNELL Wed Mar 05 11:23:43 2014		
MOTOROLA CONFIDENTIAL RESTRICTED	B	PROJECT NAME 84016295.cpm	REV 05
THE DRAWING ON THIS PRINT AND INFORMATION THEREWITH ARE PROPRIETARY TO MOTOROLA AND SHALL NOT BE USED OR DISCUSSED IN WHOLE OR IN PART WITHOUT MOTOROLA'S CONSENT. © COPYRIGHT, MOTOROLA. THIS DOES NOT IMPLY PUBLICATION	CAD FILE NAME:	PAGE 21 OF 38

iRepair

LIGHTING

REF:5400-5419

SOL LED DRIVE SELECTION

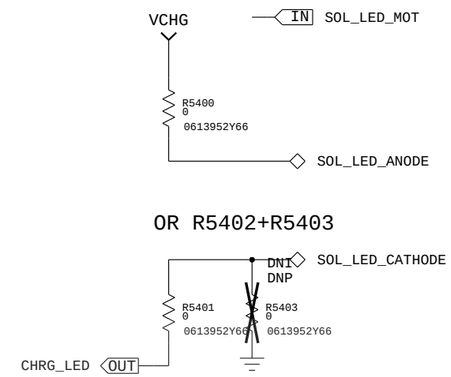

NOTIFICATION LED

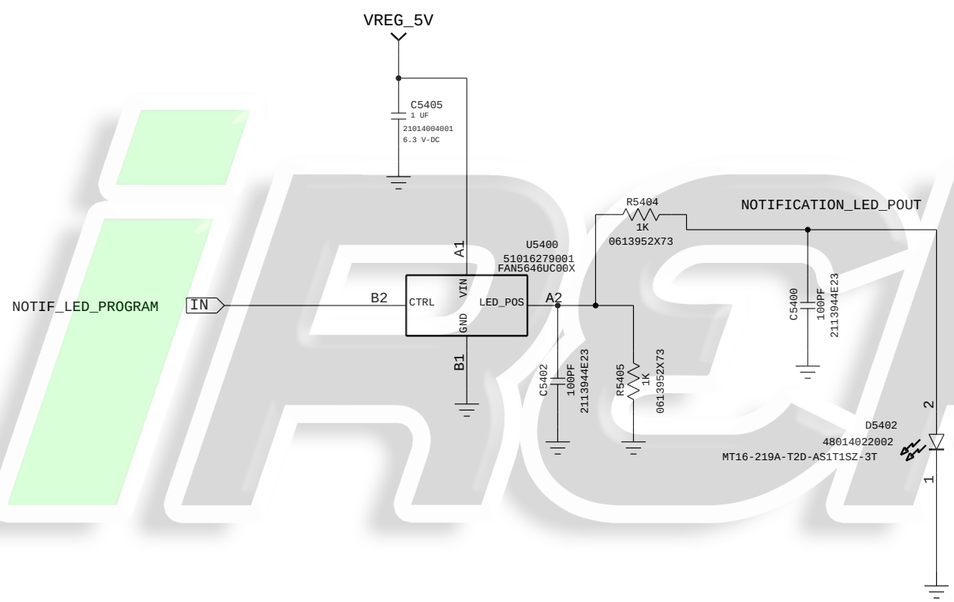

WHITE SOL LED

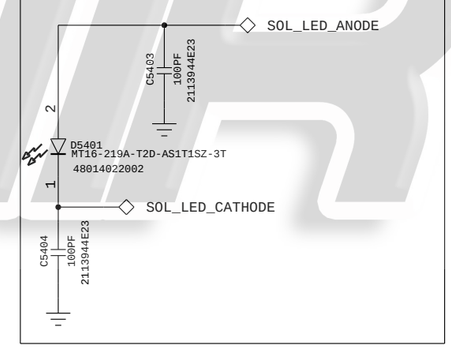

APPROVALS	MOTOROLA MOBILE DEVICES
ENGINEER:	BLOCK TITLE: peripherals
LAST MODIFIED BY: MIGUEL DE LEON Wed Mar 05 11:48:32 2014	
MOTOROLA CONFIDENTIAL RESTRICTED	B — PROJECT NAME: 84016295.cpm — REV: 05
	CAD FILE NAME: — PAGE 22 OF 38

THE DRAWING ON THIS PRINT AND INFORMATION THEREWITH ARE PROPRIETARY TO MOTOROLA AND SHALL NOT BE USED OR DISCUSSED IN WHOLE OR IN PART WITHOUT MOTOROLA'S CONSENT.
© COPYRIGHT, MOTOROLA. THIS DOES NOT IMPLY PUBLICATION

AUDIO

REF: 5700-5799

PRIMARY MIC

REF: 5700-5709

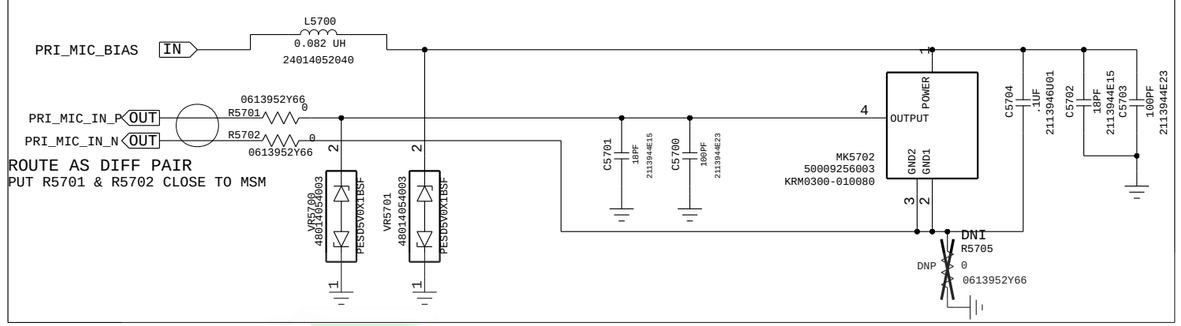

SECONDARY MIC (FLUENCE/ANC NOISE MIC)

REF:5750-5759

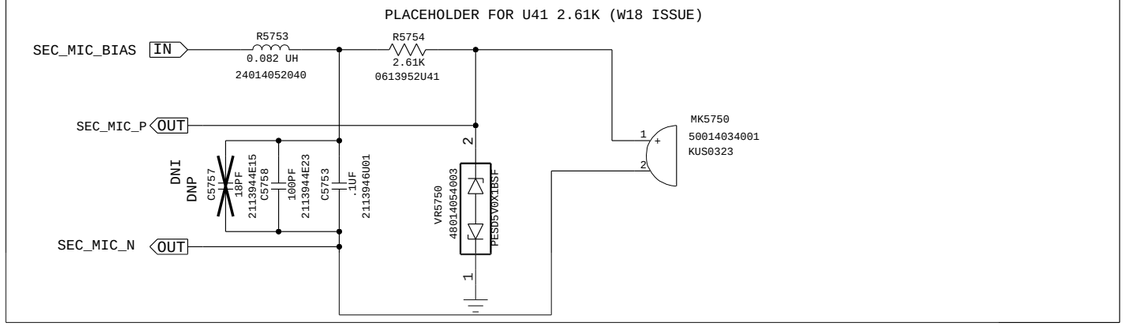

ROTARY VIBRATOR

REF 5100-5119

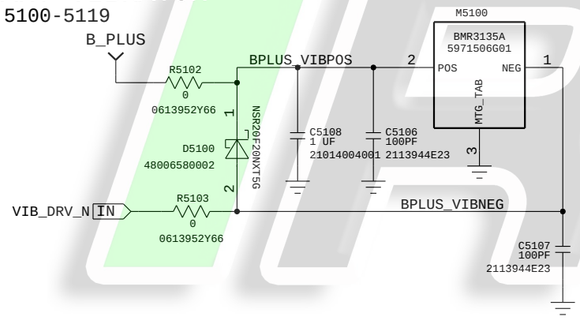

LOUDSPEAKER LEFT (TOP)

REF:5780-5789

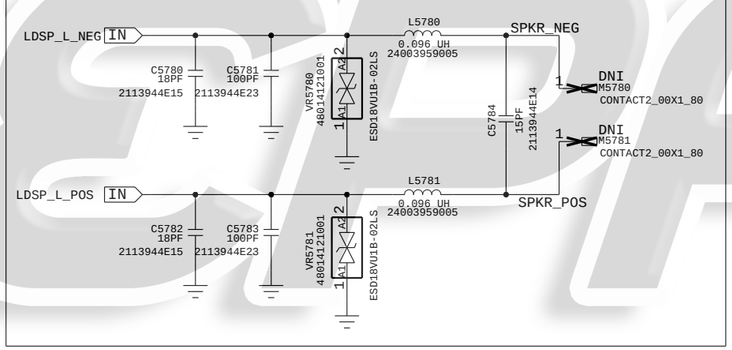

EAR PIECE

REF:5790-5799

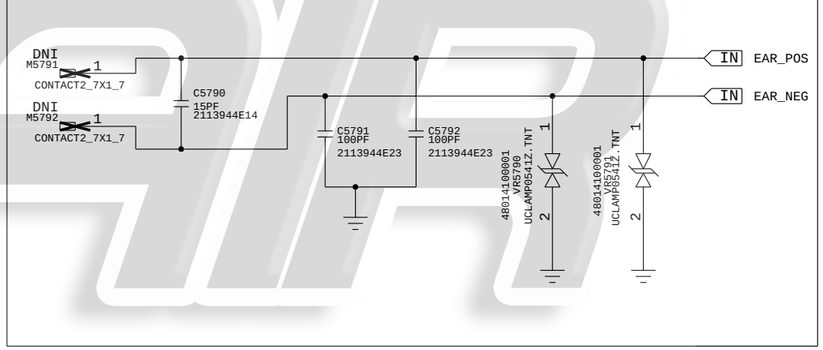

LDSP_AMP_POS IN

LDSP_AMP_NEG IN

LDSP_AMP_EN IN

APPROVALS	MOTOROLA MOBILE DEVICES	
ENGINEER: DENNIS BUDNICK	BLOCK TITLE: peripherals	
LAST MODIFIED BY: NATE CONNELL Wed Mar 05 11:23:47 2014		
MOTOROLA CONFIDENTIAL RESTRICTED	B	PROJECT NAME 84016295.cpm	REV 05
THE DRAWING ON THIS PRINT AND INFORMATION THEREWITH ARE PROPRIETARY TO MOTOROLA AND SHALL NOT BE USED OR DISCUSSED IN WHOLE OR IN PART WITHOUT MOTOROLA'S CONSENT. © COPYRIGHT, MOTOROLA. THIS DOES NOT IMPLY PUBLICATION	CAD FILE NAME:	PAGE 23 OF 38

IRSTAR

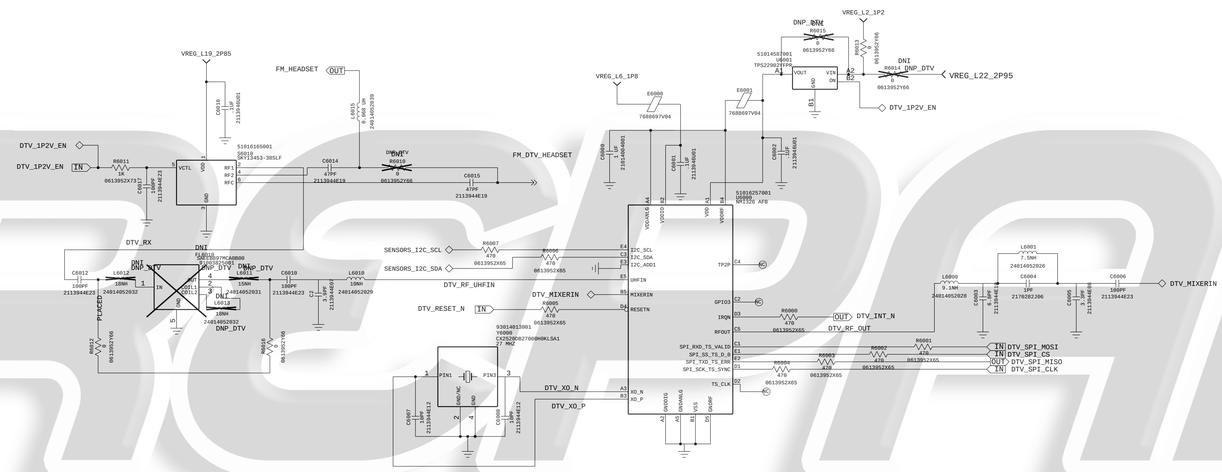

MOTOROLA CONFIDENTIAL RESTRICTED

LAST MODIFIED: Wed Mar 05 11:23:48 2014			
ENGINEER:	DRAWING NUMBER: 84		REV 05
SCHEMATIC NAME: peripherals		SIZE: D	PAGE 24 OF 38

3.5MM HEADSET

REVISIONS				
REV	ECN	DESCRIPTION	MADE BY	APPROVED

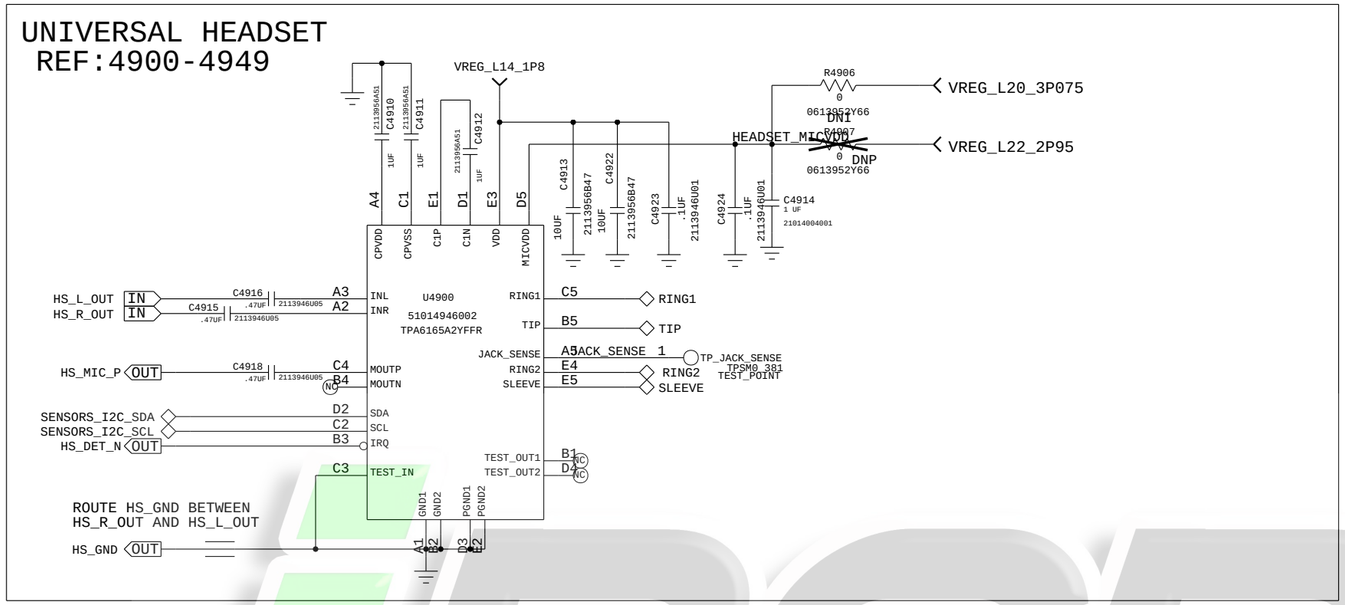

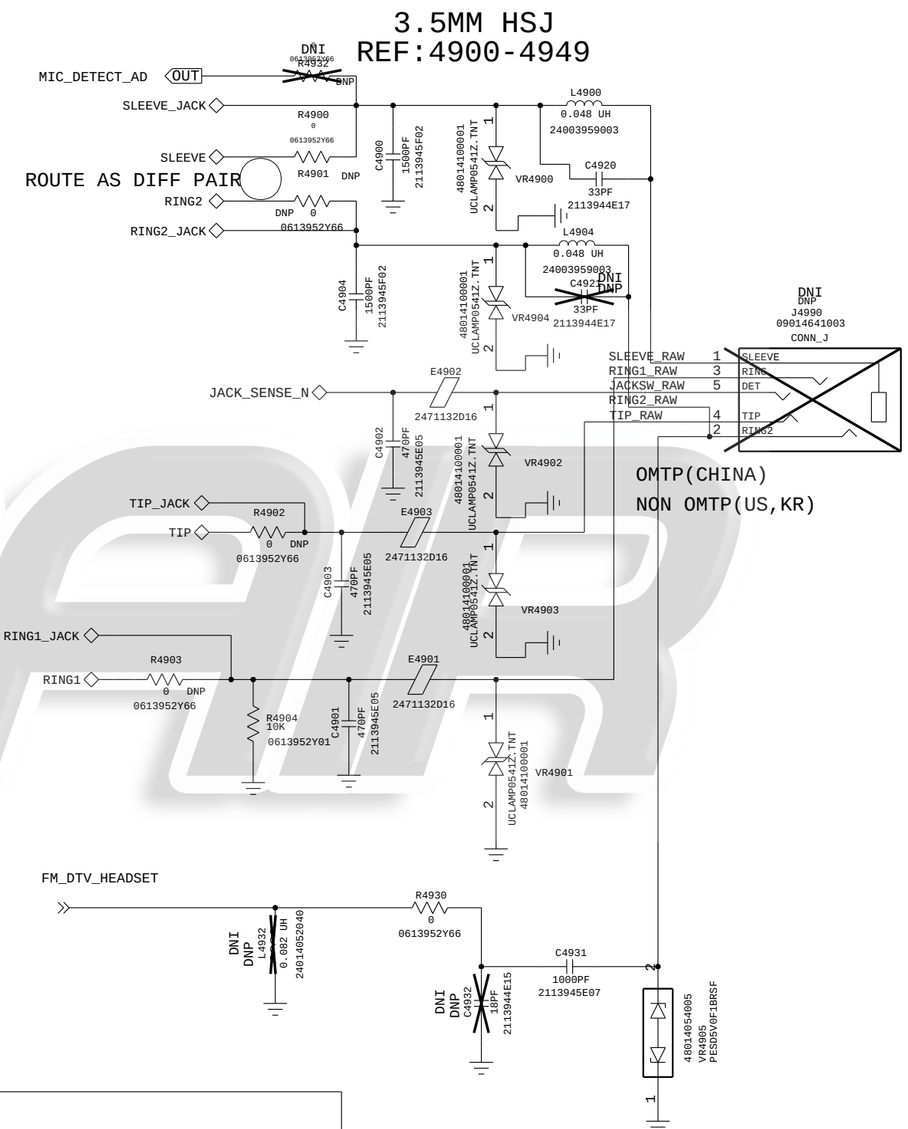

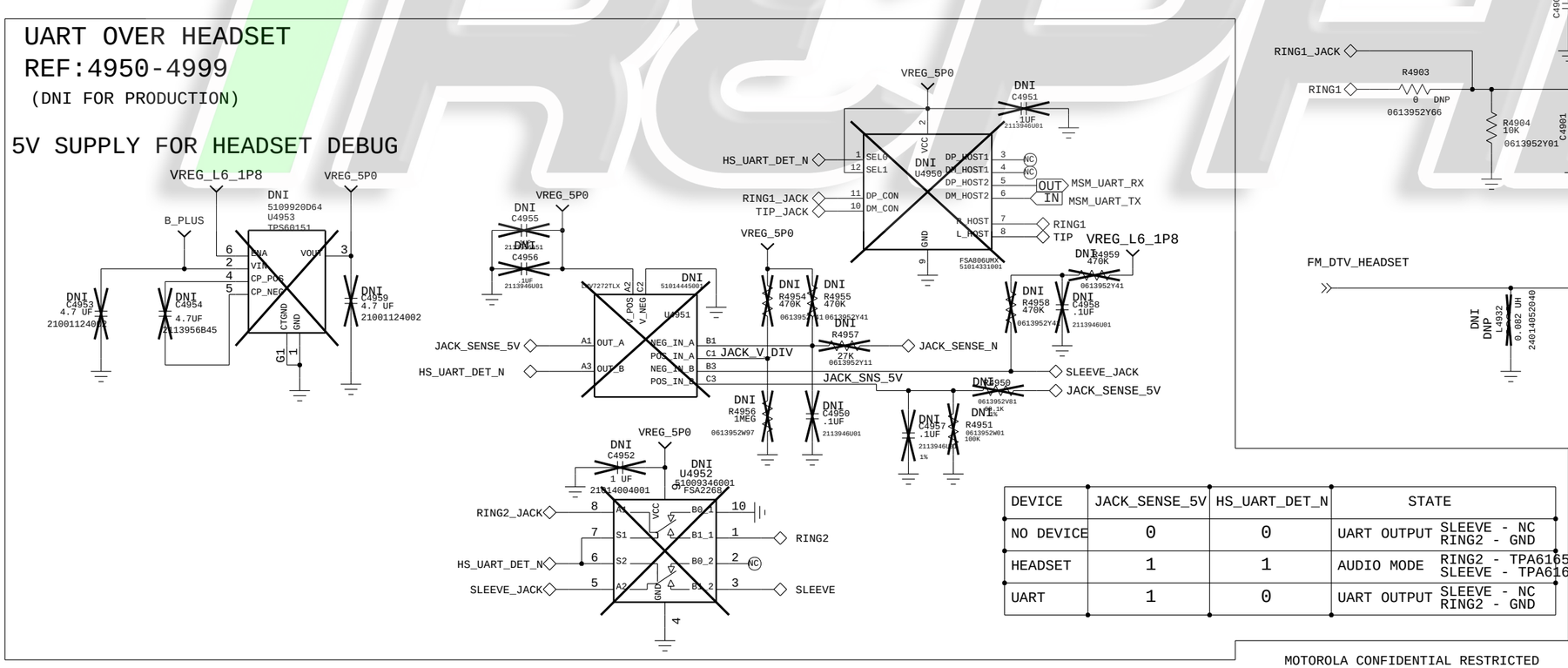

DEVICE	JACK_SENSE_5V	HS_UART_DET_N	STATE	
NO DEVICE	0	0	UART OUTPUT	SLEEVE - NC RING2 - GND
HEADSET	1	1	AUDIO MODE	RING2 - TPA6165 SLEEVE - TPA6165
UART	1	0	UART OUTPUT	SLEEVE - NC RING2 - GND

LAST MODIFIED: Tue Mar 18 11:38:05 2014

DRAWING NUMBER: 84	MOTOROLA	
DRAWN BY: DATE:	TITLE: peripherals	REV 05
LEAD ENGINEER: DATE:		SIZE B
ASSY NUMBER:	PCB FILE NAME:	PAGE 25 OF 38

MOTOROLA CONFIDENTIAL RESTRICTED

SENSORS

REF:9700-9799

PROX SENSOR/ALS

I2C ADDR:0X39

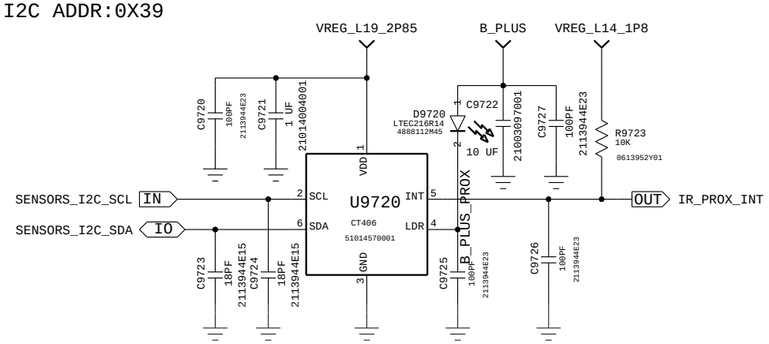

REF:9720-9729

BOARD TEMP SENSOR

I2C ADDR: 0X48

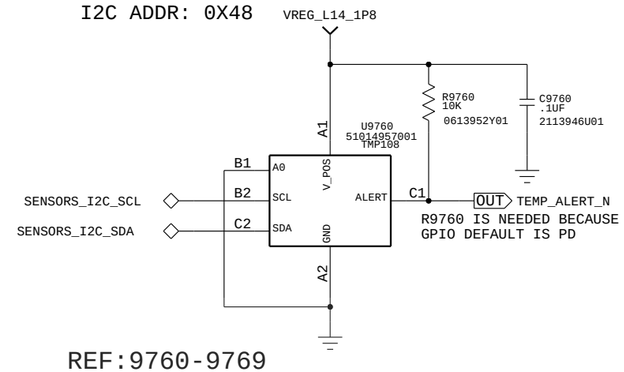

REF:9760-9769

ACCELEROMETER

I2C ADDR: 0X0E

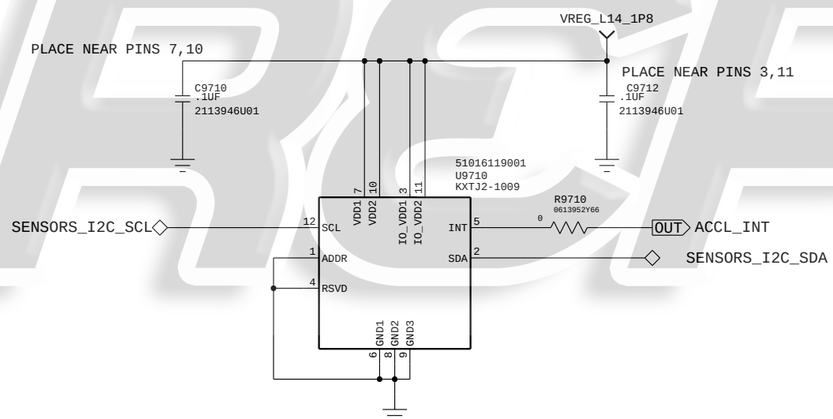

REF:9710-9719

APPROVALS	MOTOROLA MOBILE DEVICES
ENGINEER: HUNG PHAM	BLOCK TITLE: peripherals
LAST MODIFIED BY: NATE CONNELL Wed Mar 05 11:23:51 2014	
MOTOROLA CONFIDENTIAL RESTRICTED	B — PROJECT NAME: 84016295.cpm — REV: 05
THE DRAWING ON THIS PRINT AND INFORMATION THEREWITH ARE PROPRIETARY TO MOTOROLA AND SHALL NOT BE USED OR DISCUSSED IN WHOLE OR IN PART WITHOUT MOTOROLA'S CONSENT. © COPYRIGHT, MOTOROLA. THIS DOES NOT IMPLY PUBLICATION	CAD FILE NAME: — PAGE 26 OF 38

IREPAIR

SIM AND SIDEKEYS

REF:5500-5599

UIM1 REF:5500-5509

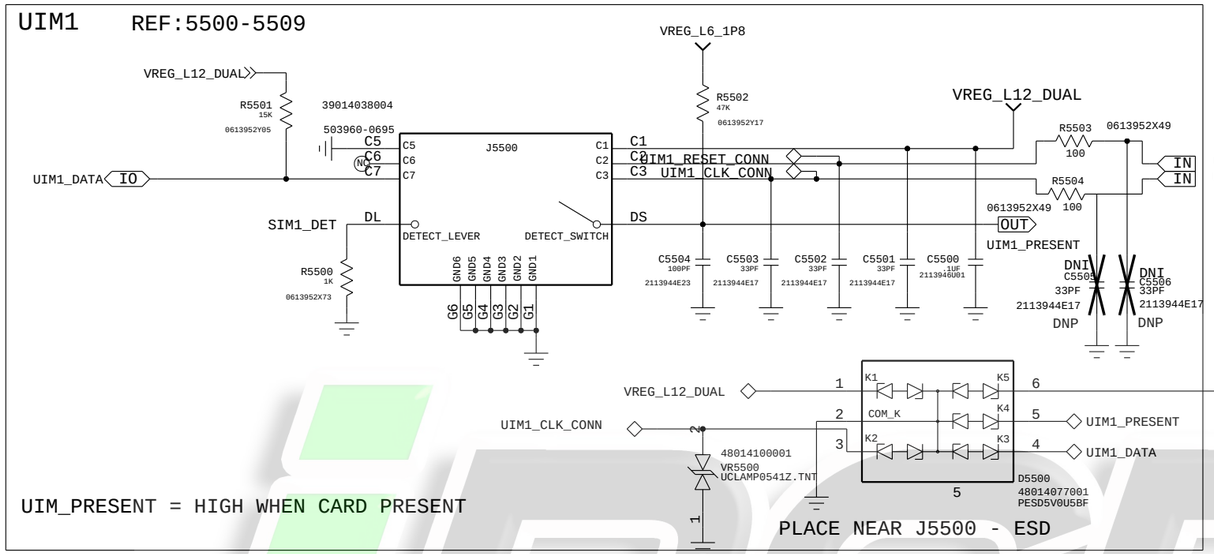

MECHANICAL KEYS

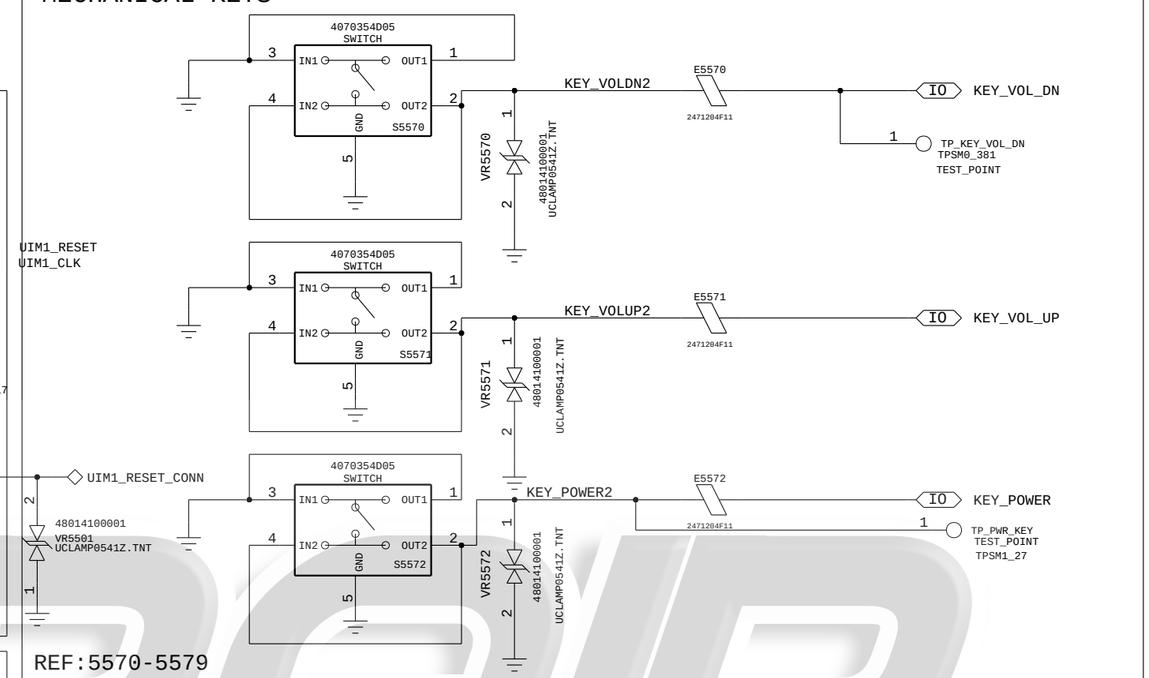

UIM2 REF:5520-5529

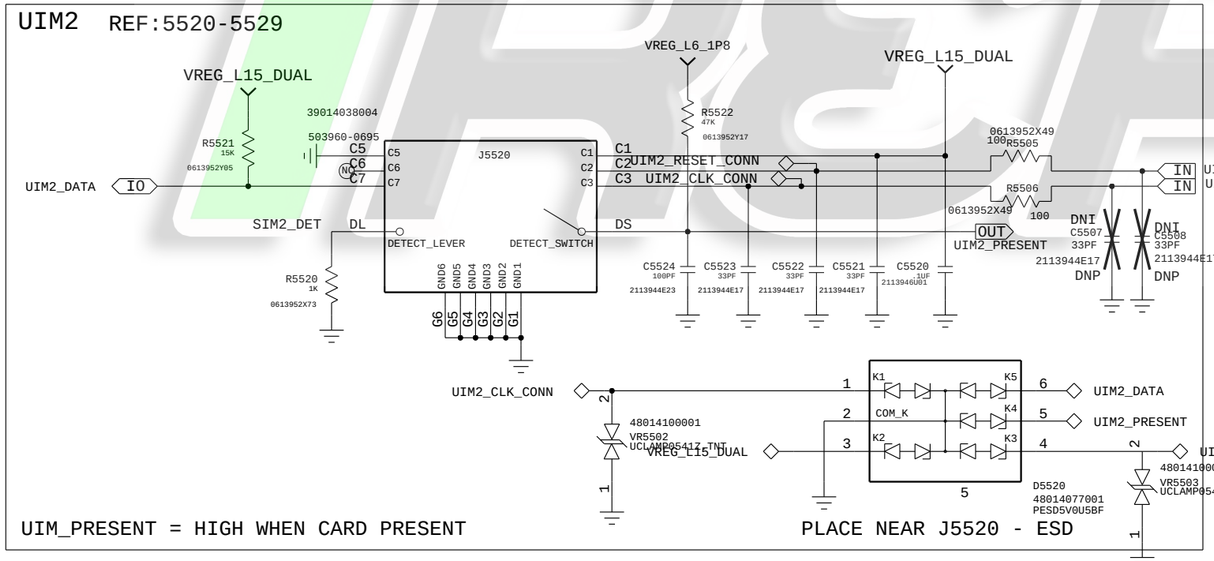

FORCE FLASH SUPPORT WITH VOL UP KEY

(DNI FOR PRODUCTION)

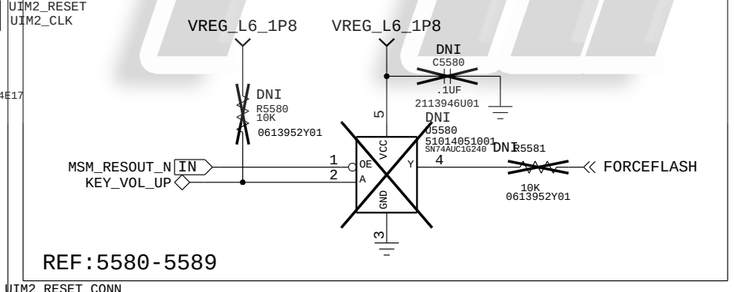

APPROVALS	MOTOROLA MOBILE DEVICES
ENGINEER: CARLOS TORRES	BLOCK TITLE: peripherals
LAST MODIFIED BY: Wed Mar 05 11:23:46 2014	
MOTOROLA CONFIDENTIAL RESTRICTED	B — PROJECT NAME: 84016295.cpm — REV: 05
THE DRAWING ON THIS PRINT AND INFORMATION THEREWITH ARE PROPRIETARY TO MOTOROLA AND SHALL NOT BE USED OR DISCUSSED IN WHOLE OR IN PART WITHOUT MOTOROLA'S CONSENT. © COPYRIGHT, MOTOROLA. THIS DOES NOT IMPLY PUBLICATION	CAD FILE NAME:
	PAGE 27 OF 38

MICRO SD

REF:5800-5819

REVISIONS				
REV	ECN	DESCRIPTION	MADE BY	APPROVED

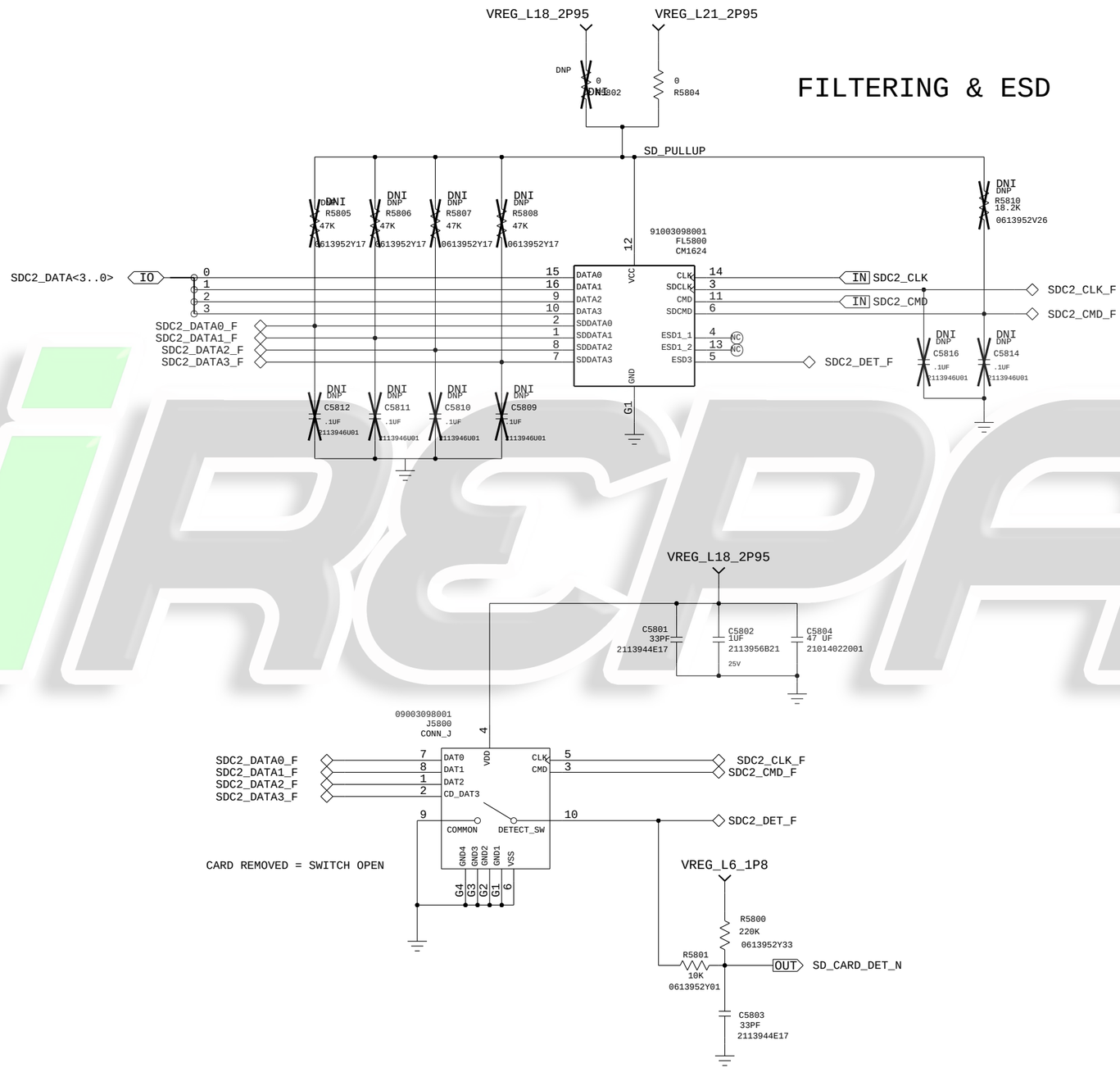

iREPAIR

LAST MODIFIED: Wed Mar 05 11:23:52 2014

DRAWING NUMBER: 84	MOTOROLA		
DRAWN BY: DATE:	TITLE:		REV 05
LEAD ENGINEER: DATE:			SIZE B
ASSY NUMBER:	PCB FILE NAME:	PAGE 28 OF 38	

MOTOROLA CONFIDENTIAL RESTRICTED

REAR CAMERA

REF:6100-6149

IF YOUR SW IS BASED ON DVX PLACE R6102 IF SW IS BASED ON DVX-LTE PLACE R6106
PLACE R6106 OR R6102 NEVER BOTH!

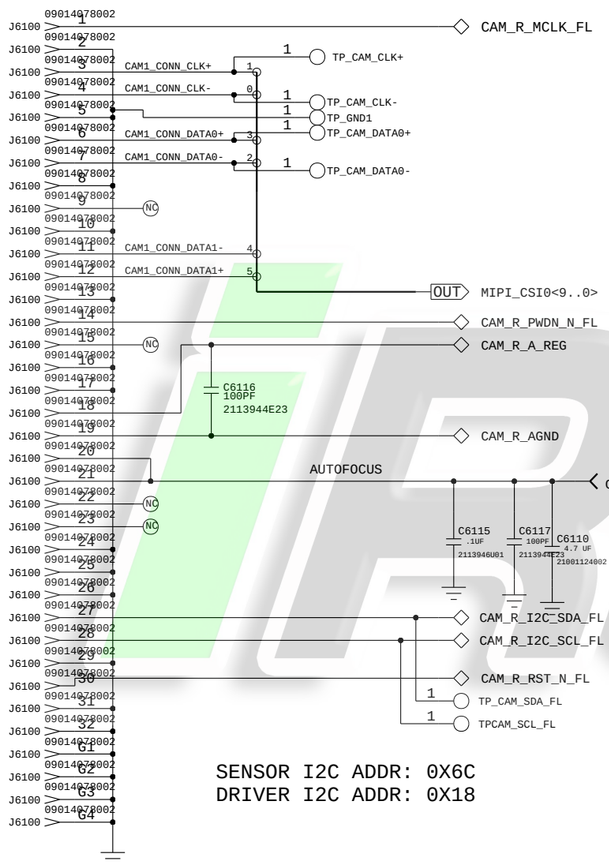

SENSOR I2C ADDR: 0X6C
DRIVER I2C ADDR: 0X18

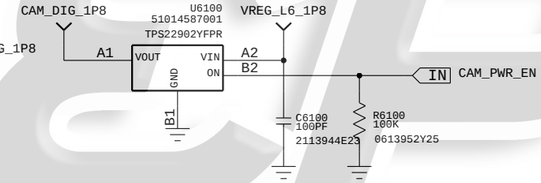

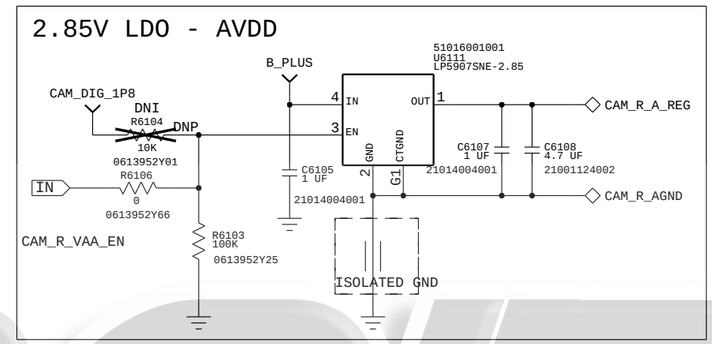

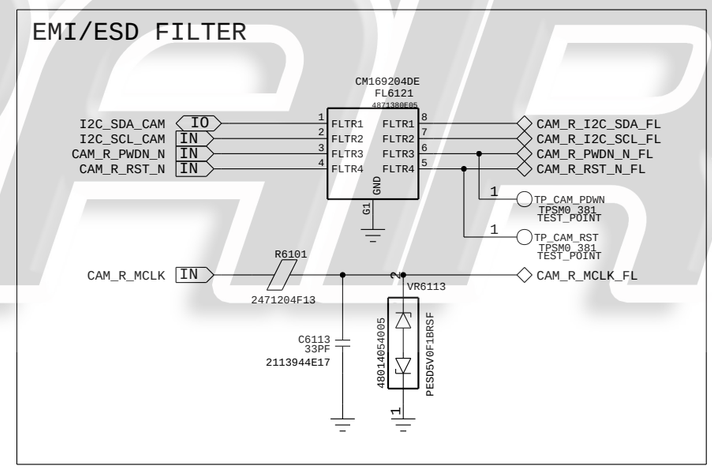

APPROVALS	MOTOROLA MOBILE DEVICES
ENGINEER: JOHN KRAMER	BLOCK TITLE: peripherals
LAST MODIFIED BY: AZIZ NOORI Mon Mar 24 15:03:38 2014	
MOTOROLA CONFIDENTIAL RESTRICTED	B — PROJECT NAME: 84016295.cpm — REV: 05
	CAD FILE NAME: — PAGE 29 OF 38

THE DRAWING ON THIS PRINT AND INFORMATION THEREWITH ARE PROPRIETARY TO MOTOROLA AND SHALL NOT BE USED OR DISCUSSED IN WHOLE OR IN PART WITHOUT MOTOROLA'S CONSENT.
© COPYRIGHT, MOTOROLA. THIS DOES NOT IMPLY PUBLICATION

DISPLAY AND TOUCH

REF DES: 5300 - 5349

REVISIONS				
REV	ECN	DESCRIPTION	MADE BY	APPROVED

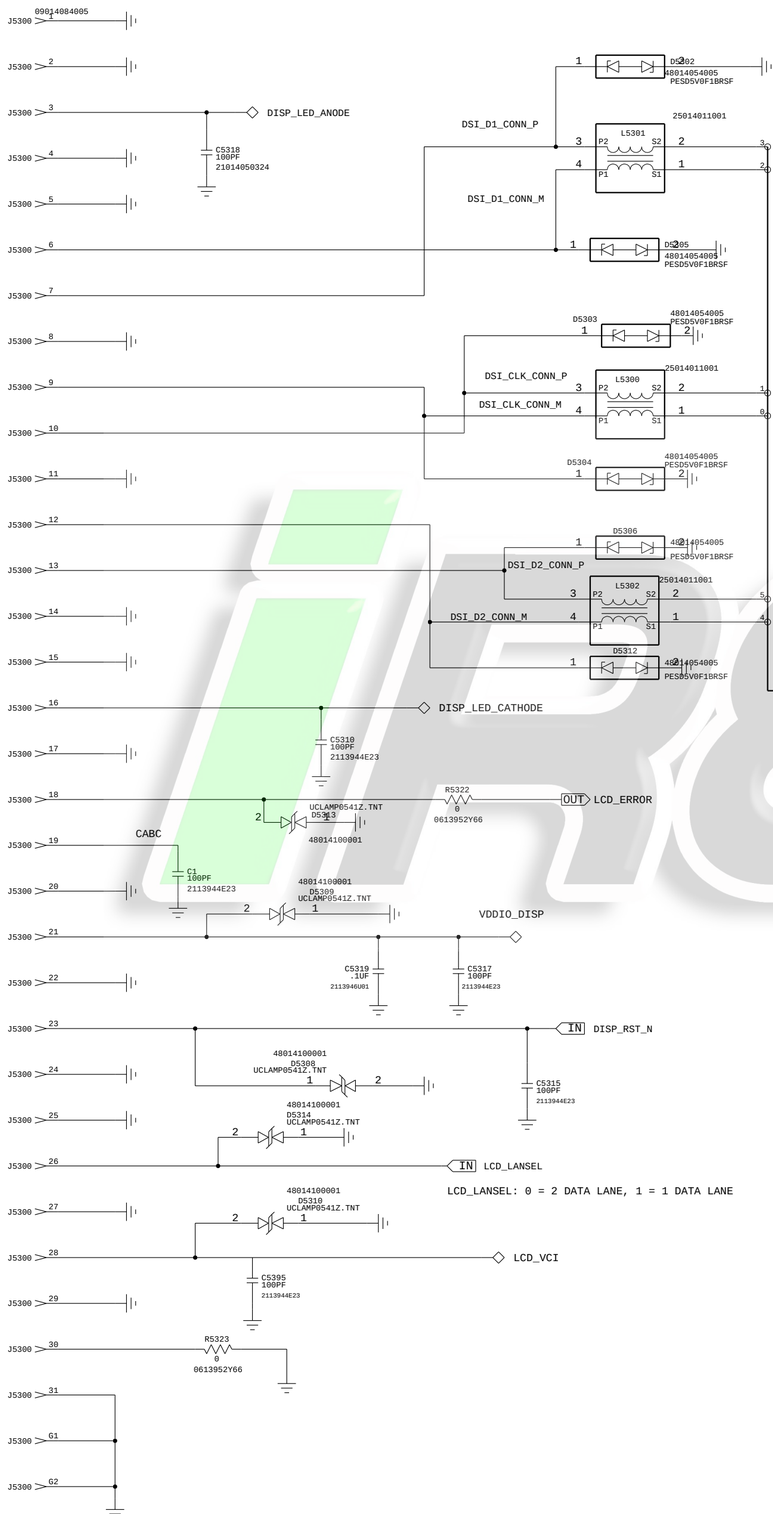

ANALOG SUPPLY FOR TOUCH

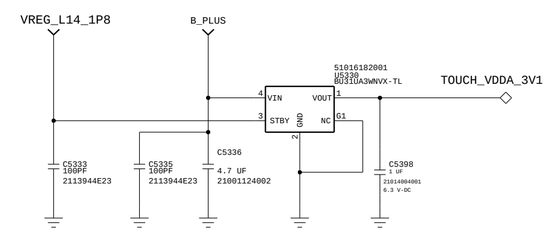

DISPLAY DIGITAL SUPPLY

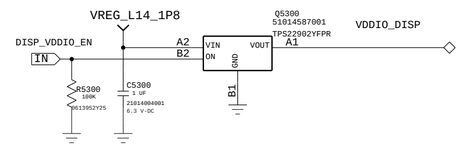

DISPLAY ANALOG SUPPLY

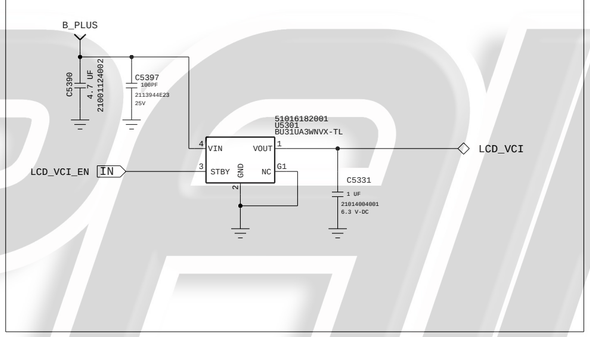

DISPLAY BACK LIGHT

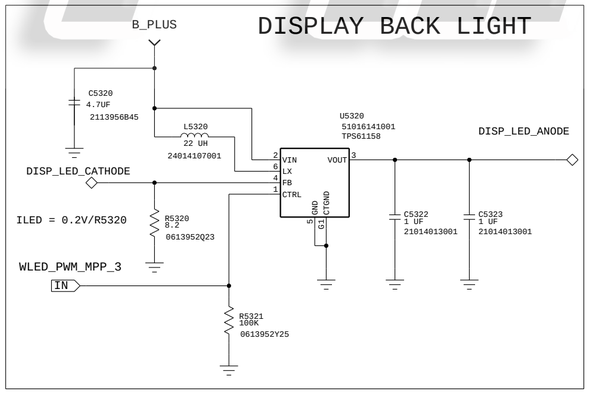

TOUCH ZIF

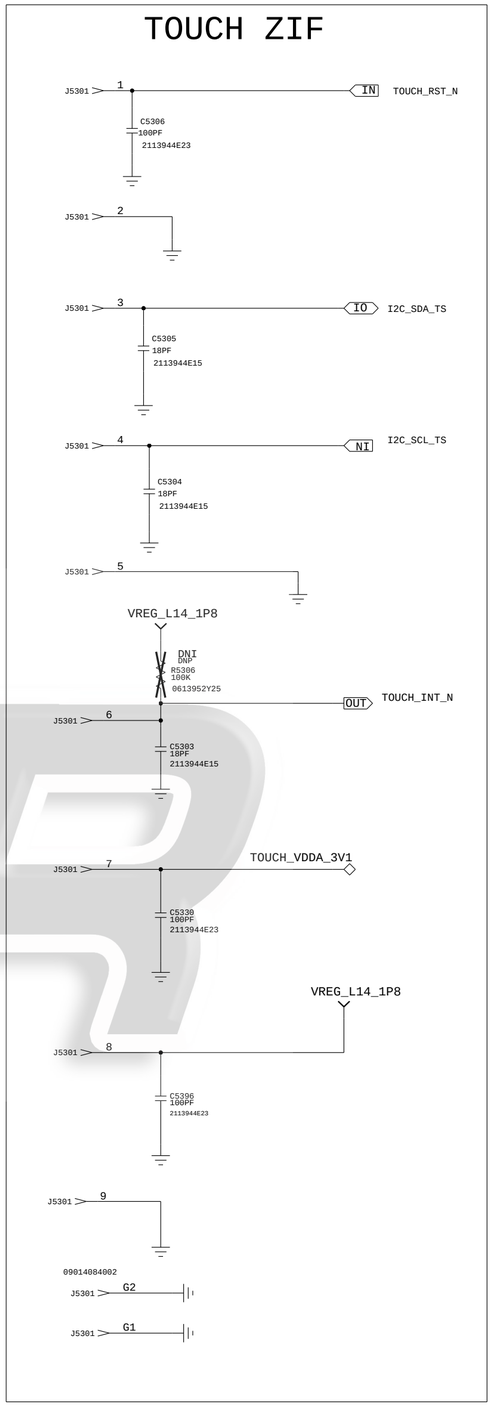

MOTOROLA CONFIDENTIAL RESTRICTED

LAST MODIFIED: Wed Mar 05 11:23:44 2014			
DRAWING NUMBER: 84	MOTOROLA		
DRAWN BY: MIGUEL DE LEON	DATE:	TITLE:	REV 05
LEAD ENGINEER: MIGUEL DE LEON	DATE:		SIZE C
ASSY NUMBER:		PCB FILE NAME:	PAGE 30 OF 38

JTAG

JTAG:MINI

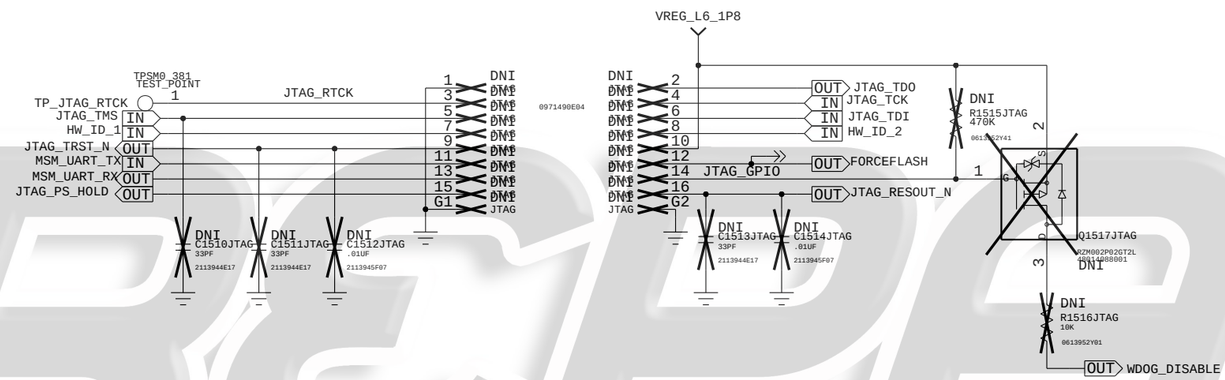

APPROVALS	MOTOROLA MOBILE DEVICES
ENGINEER:	BLOCK TITLE: peripherals
LAST MODIFIED BY: Wed Mar 05 11:23:49 2014	
MOTOROLA CONFIDENTIAL RESTRICTED	B — PROJECT NAME: 84016295.cpm — REV: 05
THE DRAWING ON THIS PRINT AND INFORMATION THEREWITH ARE PROPRIETARY TO MOTOROLA AND SHALL NOT BE USED OR DISCUSSED IN WHOLE OR IN PART WITHOUT MOTOROLA'S CONSENT. © COPYRIGHT, MOTOROLA. THIS DOES NOT IMPLY PUBLICATION	CAD FILE NAME: — PAGE 31 OF 38

iREPAIR

WTR2605 BB RF

REF 3000-3099

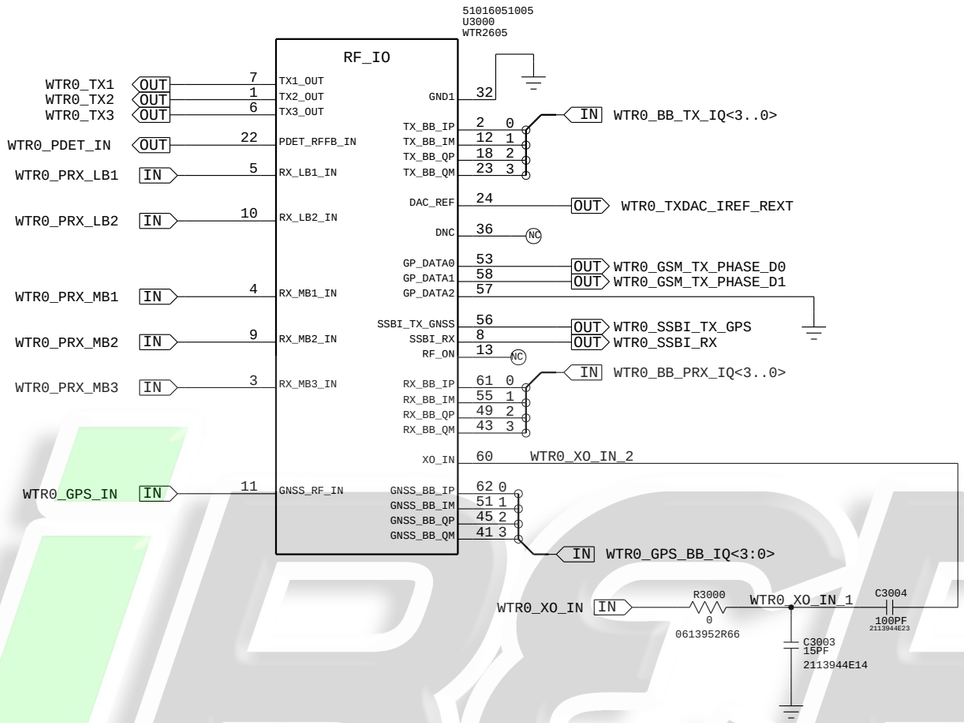

iRepair

BASED ON 80-N5420-45 REV. C

APPROVALS	MOTOROLA MOBILE DEVICES
ENGINEER: GRAHAM ALVEY	BLOCK TITLE: block_wtr2605
LAST MODIFIED BY: Wed Mar 05 11:23:53 2014	
MOTOROLA CONFIDENTIAL RESTRICTED	B — PROJECT NAME: 84016295.cpm — REV: 05
THE DRAWING ON THIS PRINT AND INFORMATION THEREWITH ARE PROPRIETARY TO MOTOROLA AND SHALL NOT BE USED OR DISCUSSED IN WHOLE OR IN PART WITHOUT MOTOROLA'S CONSENT.	CAD FILE NAME:
© COPYRIGHT, MOTOROLA. THIS DOES NOT IMPLY PUBLICATION	PAGE 32 OF 38

WTR2605 POWER

REF 3100-3199

WTR2605 POWER DISTRIBUTION 2.05V, 1.8V, & 1.225V

NOTE: STAR ROUTE TO INDIVIDUAL DECOUPLING CAPS.

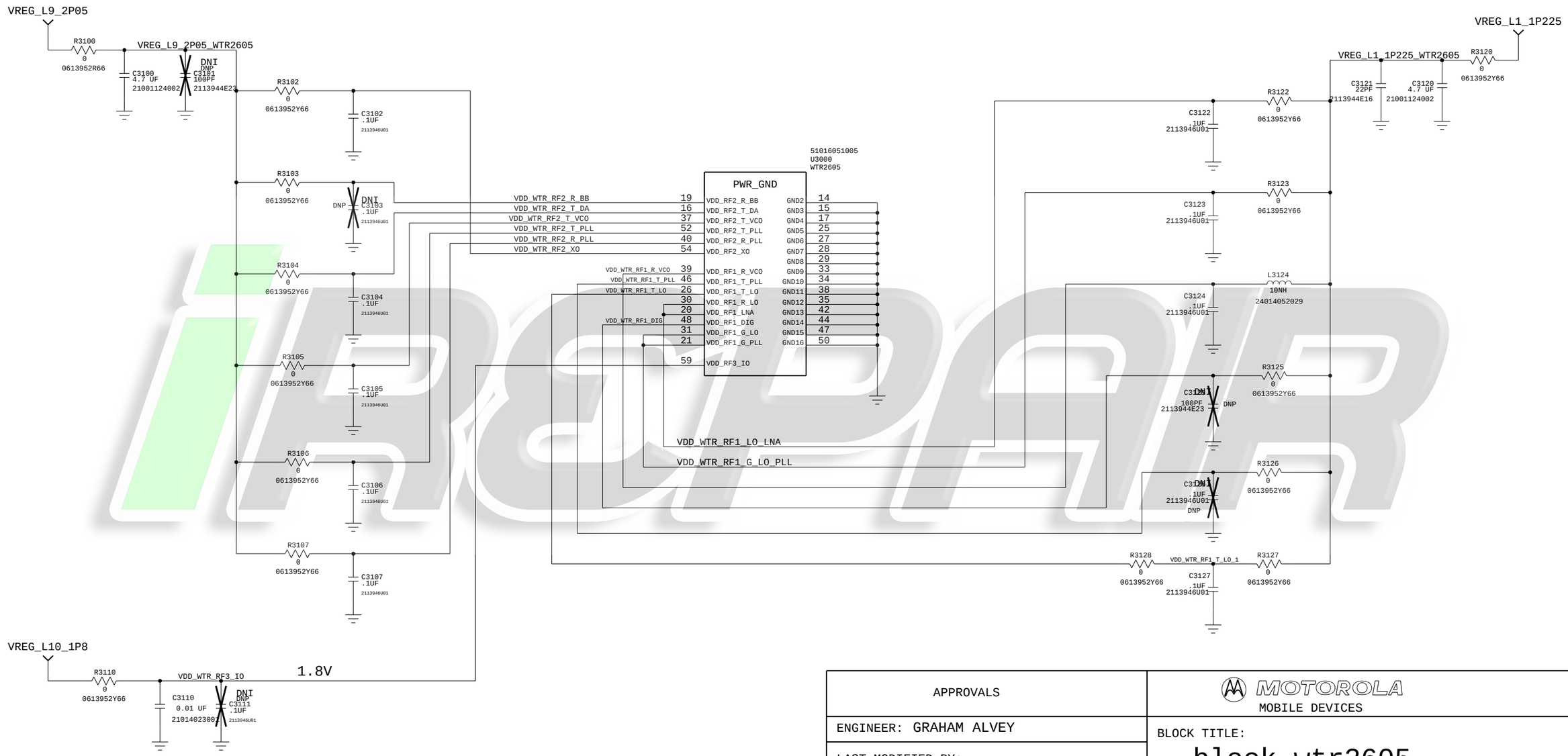

APPROVALS	MOTOROLA MOBILE DEVICES
ENGINEER: GRAHAM ALVEY	BLOCK TITLE: block_wtr2605
LAST MODIFIED BY: Wed Mar 05 11:23:53 2014	
MOTOROLA CONFIDENTIAL RESTRICTED	B — PROJECT NAME: 84016295.cpm — REV: 05
THE DRAWING ON THIS PRINT AND INFORMATION THEREWITH ARE PROPRIETARY TO MOTOROLA AND SHALL NOT BE USED OR DISCUSSED IN WHOLE OR IN PART WITHOUT MOTOROLA'S CONSENT. © COPYRIGHT, MOTOROLA. THIS DOES NOT IMPLY PUBLICATION	CAD FILE NAME: — PAGE 33 OF 38

BASED ON 80-5420-45 REV. C

RFFE: GPS

REF 4060-4099

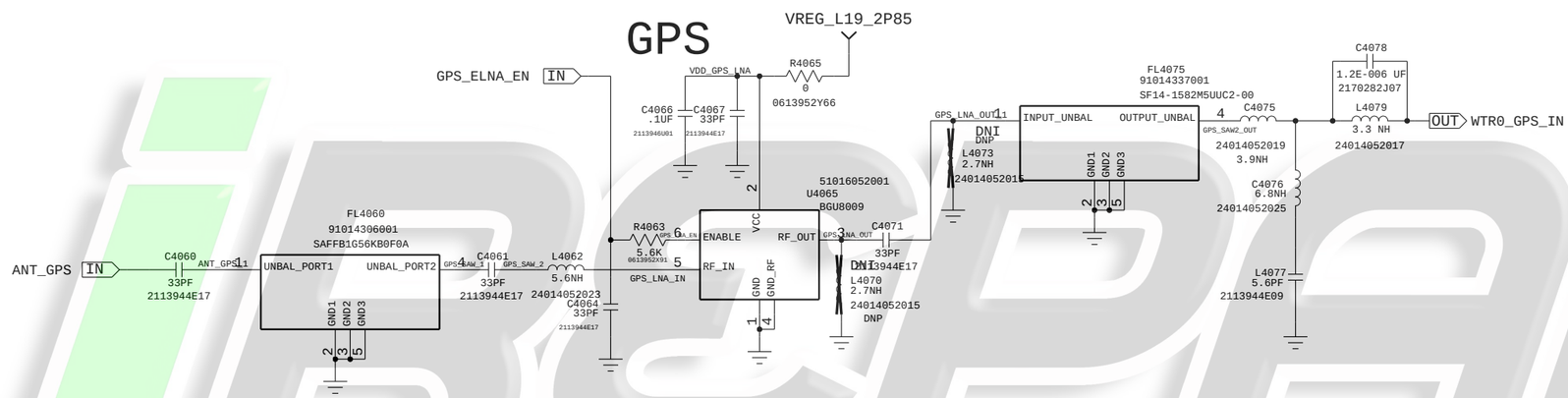

APPROVALS	MOTOROLA MOBILE DEVICES
ENGINEER: GRAHAM ALVEY	BLOCK TITLE: block_rffe_dsds
LAST MODIFIED BY: Wed Mar 07 09:25:58 2013	
MOTOROLA CONFIDENTIAL RESTRICTED	B — PROJECT NAME: 84016295.cpm — REV: 05
THE DRAWING ON THIS PRINT AND INFORMATION THEREWITH ARE PROPRIETARY TO MOTOROLA AND SHALL NOT BE USED OR DISCUSSED IN WHOLE OR IN PART WITHOUT MOTOROLA'S CONSENT. © COPYRIGHT, MOTOROLA. THIS DOES NOT IMPLY PUBLICATION	CAD FILE NAME:
	PAGE 34 OF 38

RFFE:TXM

NOTE: MTP DOES NOT SUPPORT GST/APT FOR GSM

REF 4000-4099

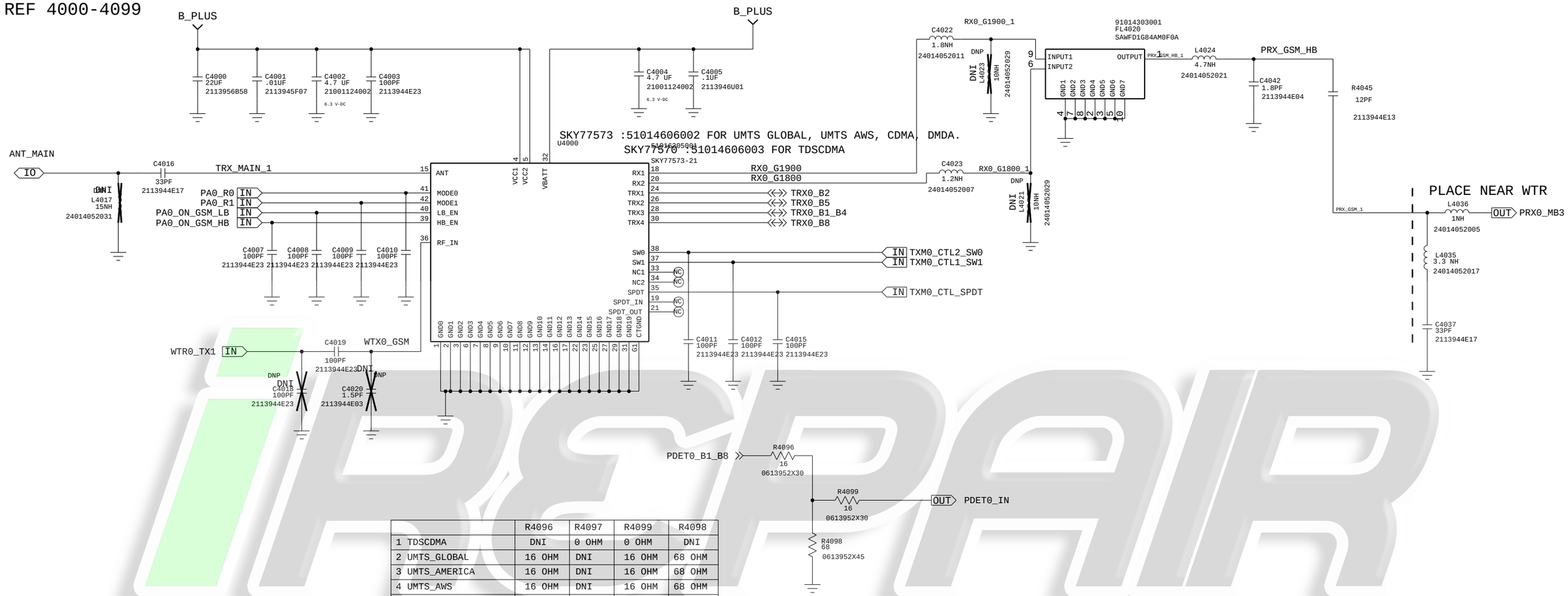

	R4096	R4097	R4099	R4098
1 TDSCDMA	DNI	0 OHM	0 OHM	DNI
2 UMTS_GLOBAL	16 OHM	DNI	16 OHM	68 OHM
3 UMTS_AMERICA	16 OHM	DNI	16 OHM	68 OHM
4 UMTS_AWS	16 OHM	DNI	16 OHM	68 OHM
5 UMTS_BRAZIL	16 OHM	DNI	16 OHM	68 OHM
6 UMTS_EURO	16 OHM	DNI	16 OHM	68 OHM
7 CDMA_BC0BC1BC10	16 OHM	DNI	16 OHM	68 OHM
8 CDMA	16 OHM	DNI	16 OHM	68 OHM
9 CDMA_GSM	16 OHM	DNI	16 OHM	68 OHM

iREPAIR

APPROVALS

ENGINEER: GRAHAM ALVEY

LAST MODIFIED BY:
Wed Mar 05 11:23:55 2014

MOTOROLA CONFIDENTIAL RESTRICTED

THE DRAWING ON THIS PRINT AND INFORMATION THEREWITH ARE PROPRIETARY TO MOTOROLA AND SHALL NOT BE USED OR DISCUSSED IN WHOLE OR IN PART WITHOUT MOTOROLA'S CONSENT.
© COPYRIGHT, MOTOROLA. THIS DOES NOT IMPLY PUBLICATION

MOTOROLA
MOBILE DEVICES

BLOCK TITLE:
block_rffe_dsds

	PROJECT NAME	REV
B	84016295.cpm	05

CAD FILE NAME:

RFFE:B2/B5

REF 4200-4299

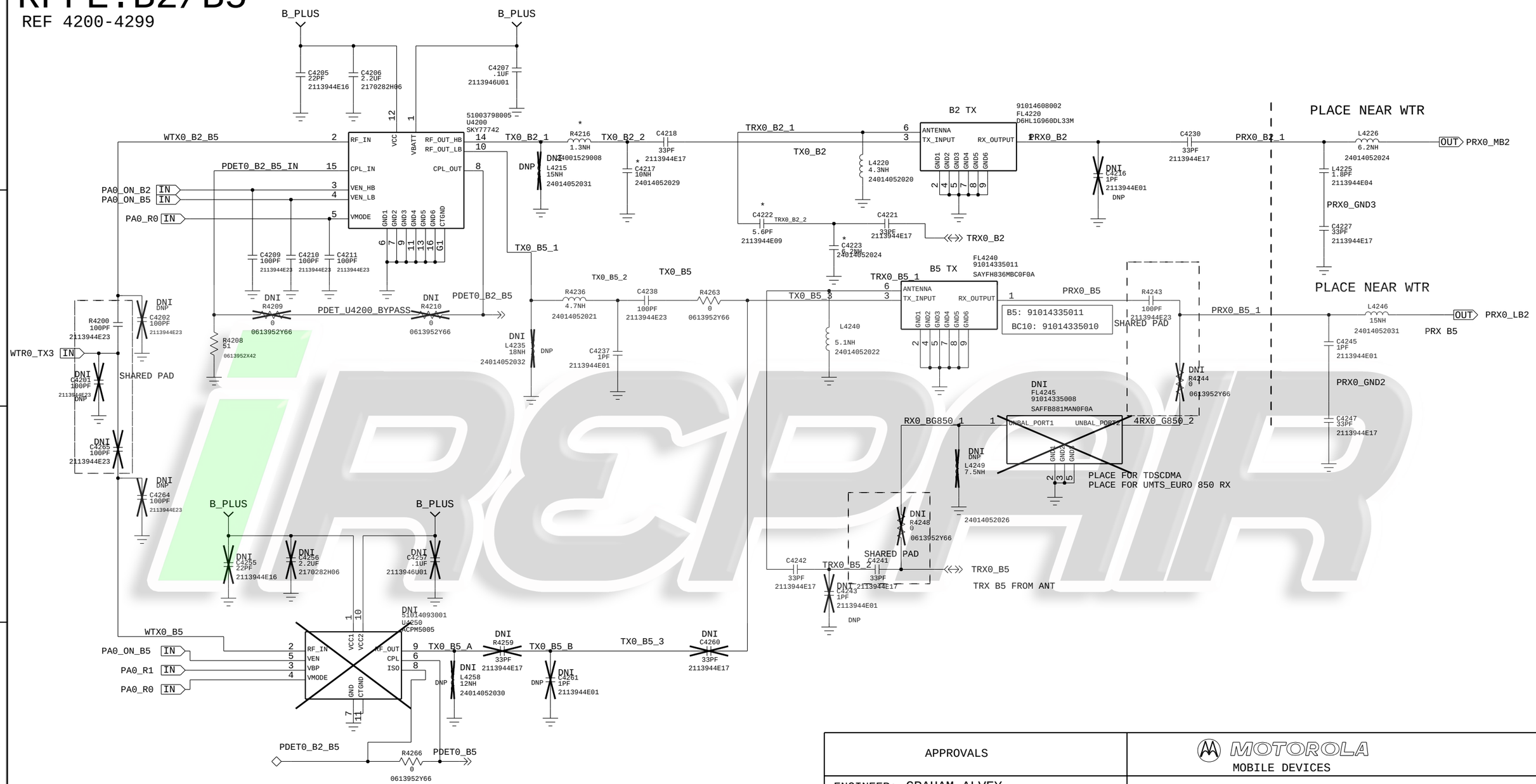

APPROVALS	MOTOROLA MOBILE DEVICES
ENGINEER: GRAHAM ALVEY	BLOCK TITLE: block_rffe_dsds
LAST MODIFIED BY: Wed Mar 05 11:23:56 2014	
MOTOROLA CONFIDENTIAL RESTRICTED	B — PROJECT NAME: 84016295.cpm — REV: 05
THE DRAWING ON THIS PRINT AND INFORMATION THEREWITH ARE PROPRIETARY TO MOTOROLA AND SHALL NOT BE USED OR DISCUSSED IN WHOLE OR IN PART WITHOUT MOTOROLA'S CONSENT.	CAD FILE NAME:
© COPYRIGHT, MOTOROLA. THIS DOES NOT IMPLY PUBLICATION	PAGE 36 OF 38

RFFE:B1/B8+B4

REF 4300-4399

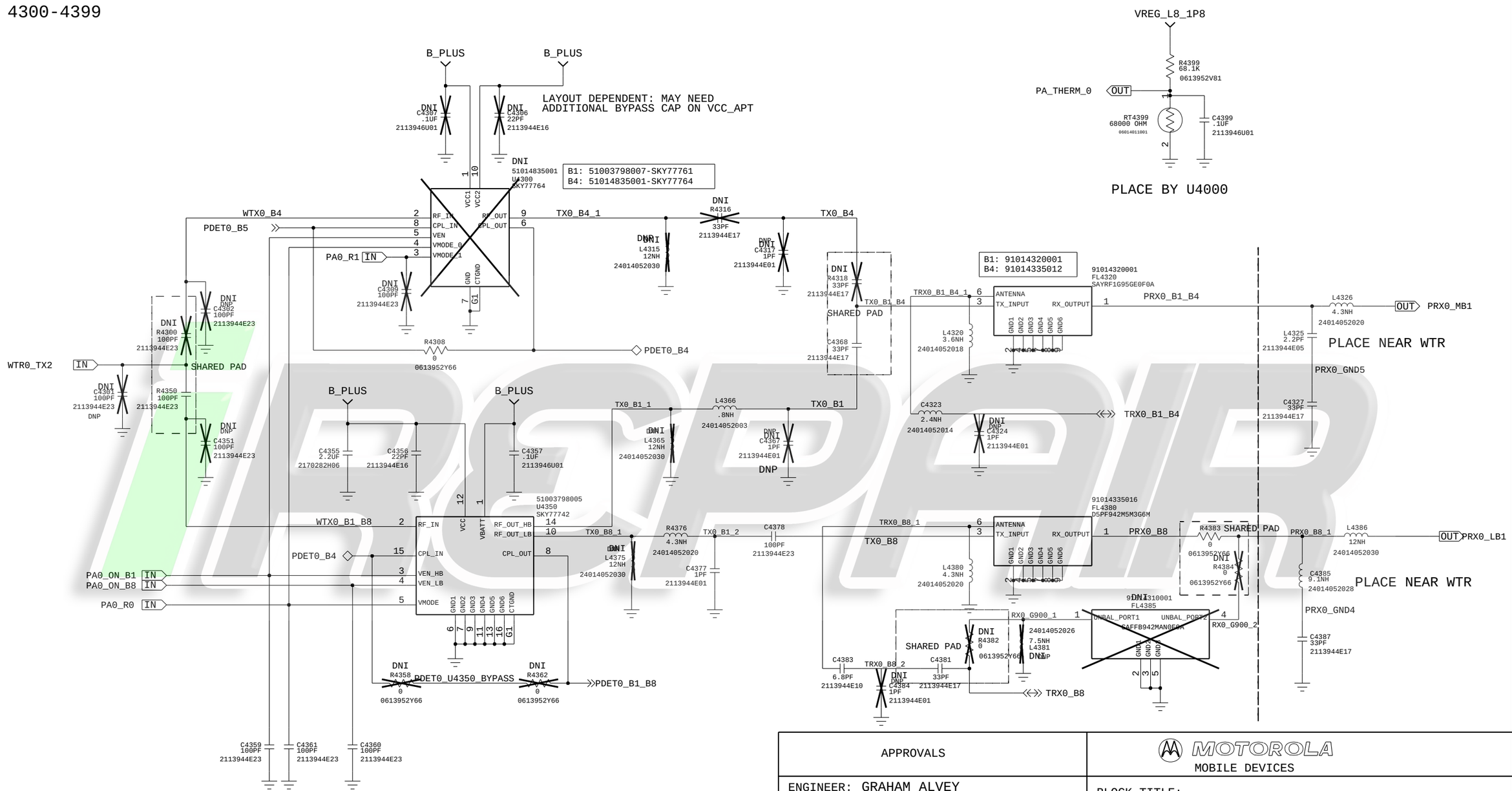

APPROVALS	MOTOROLA MOBILE DEVICES
ENGINEER: GRAHAM ALVEY	BLOCK TITLE: block_rffe_dsds
LAST MODIFIED BY: Wed Mar 05 11:23:57 2014	
MOTOROLA CONFIDENTIAL RESTRICTED	B — PROJECT NAME: 84016295.cpm — REV: 05
THE DRAWING ON THIS PRINT AND INFORMATION THEREWITH ARE PROPRIETARY TO MOTOROLA AND SHALL NOT BE USED OR DISCUSSED IN WHOLE OR IN PART WITHOUT MOTOROLA'S CONSENT. © COPYRIGHT, MOTOROLA. THIS DOES NOT IMPLY PUBLICATION	CAD FILE NAME:

ANTENNAS

MAIN ANTENNA
BOTTOM MAIN ANTENNA

850/900/1900/2100+QUAD-GSM

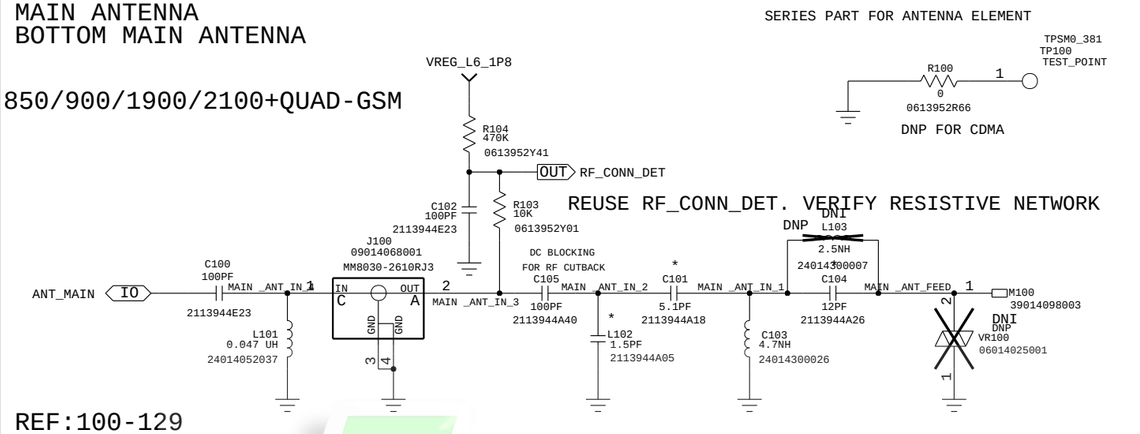

REF:100-129

BT/WLAN ANTENNA
TOP ANTENNA (NEXT TO AUDIO JACK)

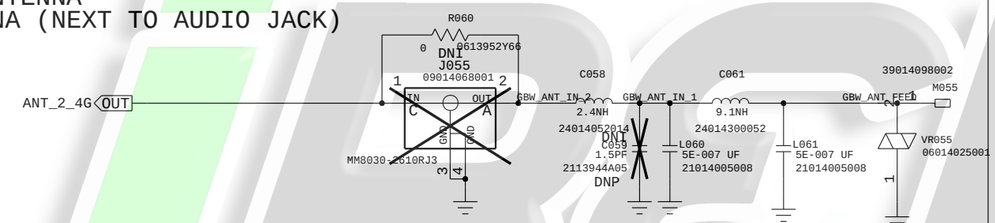

REF: 055-060

GPS ANTENNA
SIDE ANTENNA (ABOVE VOLUME KEYS)

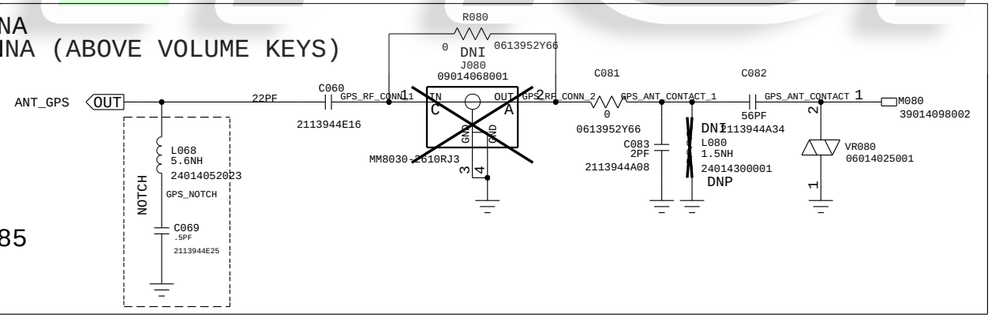

REF: 060-85

REF:130-199

APPROVALS	MOTOROLA MOBILE DEVICES
ENGINEER: MMI	BLOCK TITLE: block_antenna
LAST MODIFIED BY: GRAHAM ALVEY Wed Mar 05 11:23:59 2014	
MOTOROLA CONFIDENTIAL RESTRICTED	B — PROJECT NAME: 84016295.cpm — REV: 05
THE DRAWING ON THIS PRINT AND INFORMATION THEREWITH ARE PROPRIETARY TO MOTOROLA AND SHALL NOT BE USED OR DISCUSSED IN WHOLE OR IN PART WITHOUT MOTOROLA'S CONSENT.	CAD FILE NAME:
© COPYRIGHT, MOTOROLA. THIS DOES NOT IMPLY PUBLICATION	PAGE 38 OF 38

IRCPAIR